REV	ZONE	REVISION	DATE	DWG.

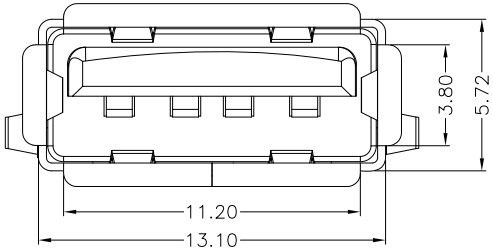

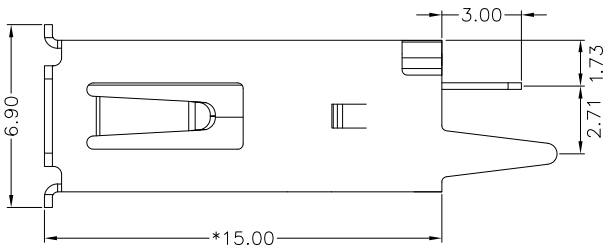

CUA008 VHP - * B * N

- USB TYPE A
- V=VERTICAL
  H=DIP
  P=WITH TAB PIN
- COLOR
  W=WHITE
- MATERIAL
  B=PBT
- CONTACT PLATING
  1=GOLD FLASH
  2=3u"
  3=5u"
  4=15u"
  5=30u"
- SHELL
  N=NICKEL PLATED

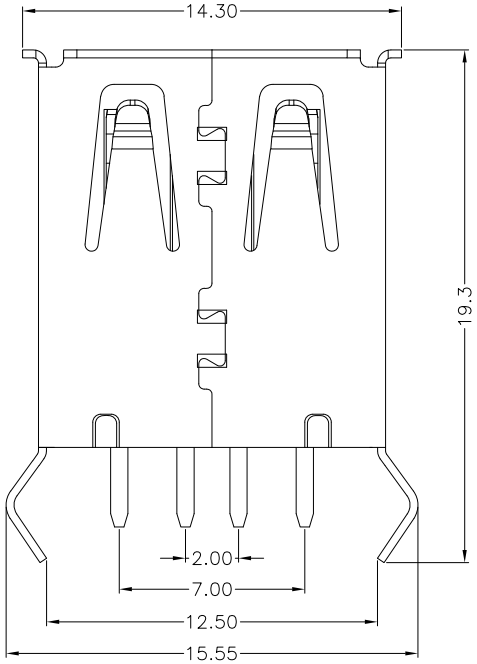

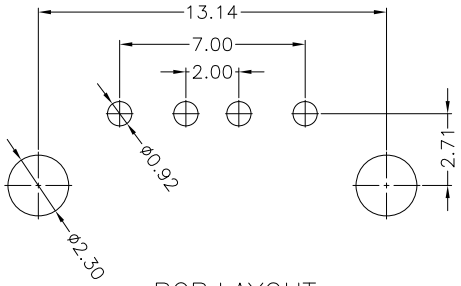

PCB:LAYOUT

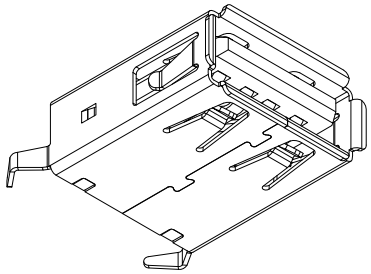

Specification
*Electrical Characteristics:
Contact Current Rating:1 Amperes.30V AC
Dielectric Withstanding Voltage:AC 500V R.M.S.
Insulation Resistance:1000MΩ Min.
Contact Resistance:30mΩ Max.
*Environmental:
Operating Temperature:−40°C～+60°C.
*Mechanical Characteristics:
Matching Cycles:1500 Cycles
Mating Force:3.57kg Max.
Unmating Force:0.70kg Min.
*Material:
Housing:PBT UL 94V−0 Color:White or black
Contact:PHOSPHOR BRONZE
(t=0.25mm).Plating Au1u;"3u;"5u;"10u;"
15u;"30u"
Shell:BRASS(t=0.30mm).

FLYiNG

MODEL	CUA008VHP-*B*N	PAGE 1 OF 1

COMPUTER NO.			UNIT	SCALE	PART NAME	
CUA-S001-008			mm	1 : 1	USB TYPE A, VT, DIP	
DWG.	Eric	DWG. DATE	2014-04-29	TOLERANCE		REV.
CKD.	Aaron	CKD. DATE	2014-04-29	0.000mm ± 0.075mm 0.00 mm ± 0.15 mm 0.0 mm ± 0.25 mm		A.0
APPD.		APPD. DATE				