11A, 600V N-CHANNEL SUPER-JUNCTION MOSFET

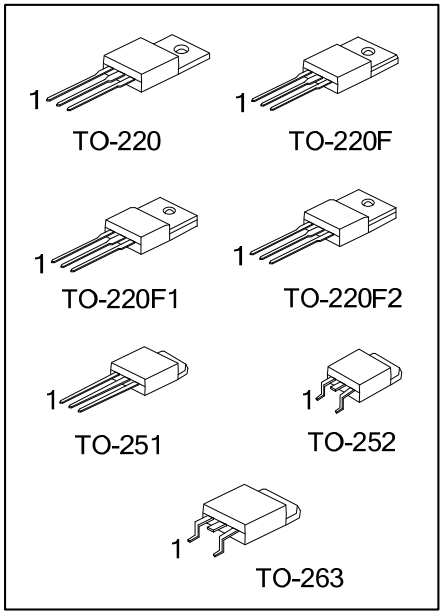

■ DESCRIPTION

The UTC **11NM60** is an Super Junction MOSFET Structure. It uses UTC advanced planar stripe, DMOS technology to provide customers perfect switching performance, minimal on-state resistance.

The UTC **11NM60** is universally applied in electronic lamp ballasts based on half bridge topology, high efficiency switched mode power supplies, active power factor correction, etc.

■ FEATURES

* $R_{DS(ON)} \leq 0.5\Omega$ @ V_{GS}=10V, I_D=5.5A
* By using Super Junction Structure
* Fast Switching
* With 100% Avalanche Tested

■ SYMBOL

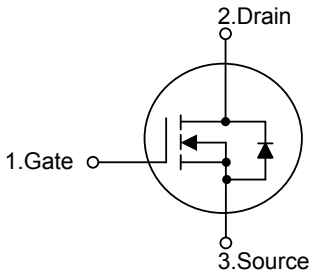

■ ORDERING INFORMATION

Ordering Number		Package	Pin Assignment			Packing
Lead Free	Halogen Free		1	2	3	
11NM60L-TA3-T	11NM60G-TA3-T	TO-220	G	D	S	Tube
11NM60L-TF1-T	11NM60G-TF1-T	TO-220F1	G	D	S	Tube
11NM60L-TF3-T	11NM60G-TF3-T	TO-220F2	G	D	S	Tube
11NM60L-TF3-T	11NM60G-TF3-T	TO-220F	G	D	S	Tube
11NM60L-TM3-T	11NM60G-TM3-T	TO-251	G	D	S	Tube
11NM60L-TN3-R	11NM60G-TN3-R	TO-252	G	D	S	Tape Reel
11NM60L-TQ2-T	11NM60G-TQ2-T	TO-263	G	D	S	Tube
11NM60L-TQ2-R	11NM60G-TQ2-R	TO-263	G	D	S	Tape Reel

Note: Pin Assignment: G: Gate D: Drain S: Source

11NM60G-TA3-T
- (1)Packing Type
- (2)Package Type
- (3)Green Package

(1) T: Tube, R: Tape Reel

(2) TA3: TO-220, TF1: TO-220F1, TF2: TO-220F2
TF3: TO-220F, TM3: TO-251, TN3: TO-252
TQ2: TO-263

(3) G: Halogen Free and Lead Free, L: Lead Free

■ MARKING

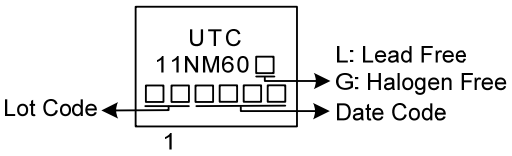

■ ABSOLUTE MAXIMUM RATINGS (T_C = 25°C, unless otherwise specified)

PARAMETER		SYMBOL	RATINGS	UNIT
Drain to Source Voltage		V_{DSS}	600	V
Gate to Source Voltage		V_{GSS}	±30	V
Continuous Drain Current	Continuous	I_D	11 (Note 2)	A
Pulsed Drain Current	Pulsed (Note 3)	I_{DM}	44 (Note 2)	A
Avalanche Current (Note 3)		I_{AR}	2.4	A
Single Pulsed Avalanche Energy(Note 4)		E_{AS}	452	mJ
Peak Diode Recovery dv/dt (Note 5)		dv/dt	5.0	V/ns
Power Dissipation	TO-220/TO-263	P_D	160	W
	TO-220F/TO-220F1 TO-220F2		24	W
	TO-251/TO-252		80	W
Junction Temperature		T_J	+150	°C
Storage Temperature		T_{STG}	-55 ~ +150	°C

Notes: 1. Absolute maximum ratings are those values beyond which the device could be permanently damaged. Absolute maximum ratings are stress ratings only and functional device operation is not implied.
2. Drain current limited by maximum junction temperature.
3. Repetitive Rating : Pulse width limited by maximum junction temperature.
4. L=157mH, I_{AS}=2.4A, V_{DD}= 50V, R_G=25Ω, Starting T_J=25°C
5. I_{SD} ≤11A, di/dt ≤200A/μs, V_{DD} ≤BV_{DSS}, Starting T_J=25°C

■ THERMAL RESISTANCES CHARACTERISTICS

PARAMETER		SYMBOL	RATINGS	UNIT
Junction to Ambient	TO-220/TO-220F TO-220F1/TO-220F2 TO-263	θ_{JA}	62.5	°C/W
	TO-251/TO-252		110	°C/W
Junction to Case	TO-220/TO-263	θ_{JC}	0.78	°C/W
	TO-220F/TO-220F1 TO-220F2		5.2	°C/W
	TO-251/TO-252		1.56	°C/W

■ ELECTRICAL CHARACTERISTICS (T_J=25°C, unless otherwise specified)

PARAMETER	SYMBOL	TEST CONDITIONS	MIN	TYP	MAX	UNIT
OFF CHARACTERISTICS						
Drain-Source Breakdown Voltage	BV_{DSS}	V_{GS}=0V, I_D=250μA	600			V
Drain-Source Leakage Current	I_{DSS}	V_{DS}=600V, V_{GS}=0V			10	μA
Gate-Source Leakage Current	I_{GSS}	V_{DS}=0V ,V_{GS}=±30V			±100	nA
ON CHARACTERISTICS						
Gate Threshold Voltage	$V_{GS(TH)}$	V_{DS}= V_{GS}, I_D=250μA	2.5		4.5	V
Drain-Source On-State Resistance	$R_{DS(ON)}$	V_{GS}=10V, I_D=5.5A			0.50	Ω
DYNAMIC PARAMETERS						
Input Capacitance	C_{ISS}	V_{DS}=25V,V_{GS}=0V, f=1.0MHz		595		pF
Output Capacitance	C_{OSS}			600		pF
Reverse Transfer Capacitance	C_{RSS}			39		pF
SWITCHING PARAMETERS						
Total Gate Charge	Q_G	V_{DS}=480V, V_{GS}=10V, I_D=11A , I_G=1mA (Note 1, 2)		28		nC
Gate-Source Charge	Q_{GS}			4.5		nC
Gate-Drain Charge	Q_{GD}			9		nC
Turn-ON Delay Time	$t_{D(ON)}$	V_{DD}=100V, V_{GS}=10V, I_D=11A, R_G=25Ω (Note 1, 2)		11		ns
Turn-ON Rise Time	t_R			24		ns
Turn-OFF Delay Time	$t_{D(OFF)}$			130		ns
Turn-OFF Fall Time	t_F			50		ns
SOURCE- DRAIN DIODE RATINGS AND CHARACTERISTICS						
Maximum Body-Diode Continuous Current	I_S				11	A
Maximum Body-Diode Pulsed Current	I_{SM}				44	A
Drain-Source Diode Forward Voltage	V_{SD}	I_S =11A, V_{GS}=0V			1.4	V
Reverse Recovery Time	t_{rr}	I_S=11A, V_{GS}=0V di/dt=200A/μs (Note 1)		350		ns
Reverse Recovery Charge	Q_{rr}			5		μC

Notes: 1. Pulse Test : Pulse width ≤ 300μs, Duty cycle ≤ 2%.
2. Essentially independent of operating temperature.

■ TEST CIRCUITS AND WAVEFORMS

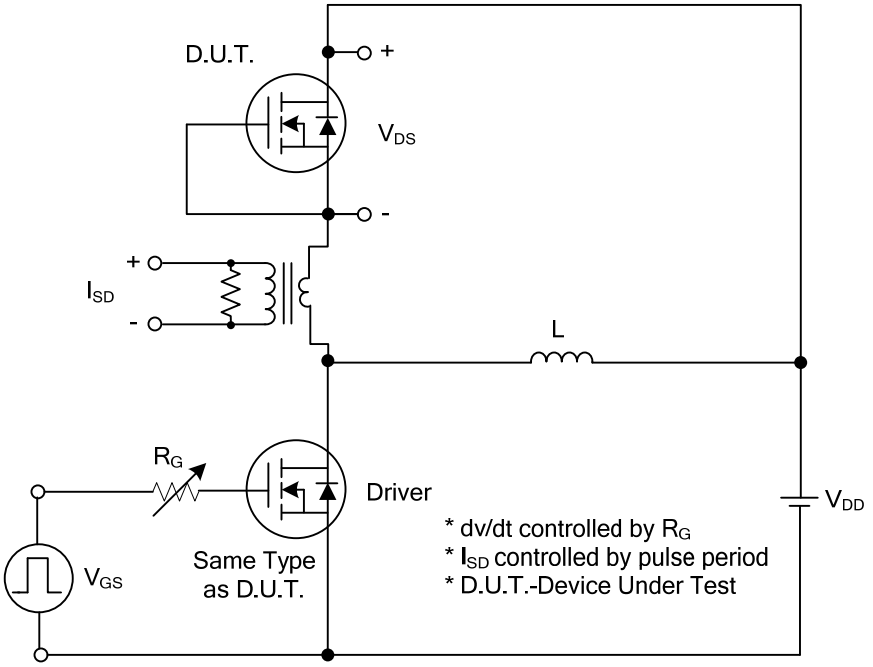

Peak Diode Recovery dv/dt Test Circuit

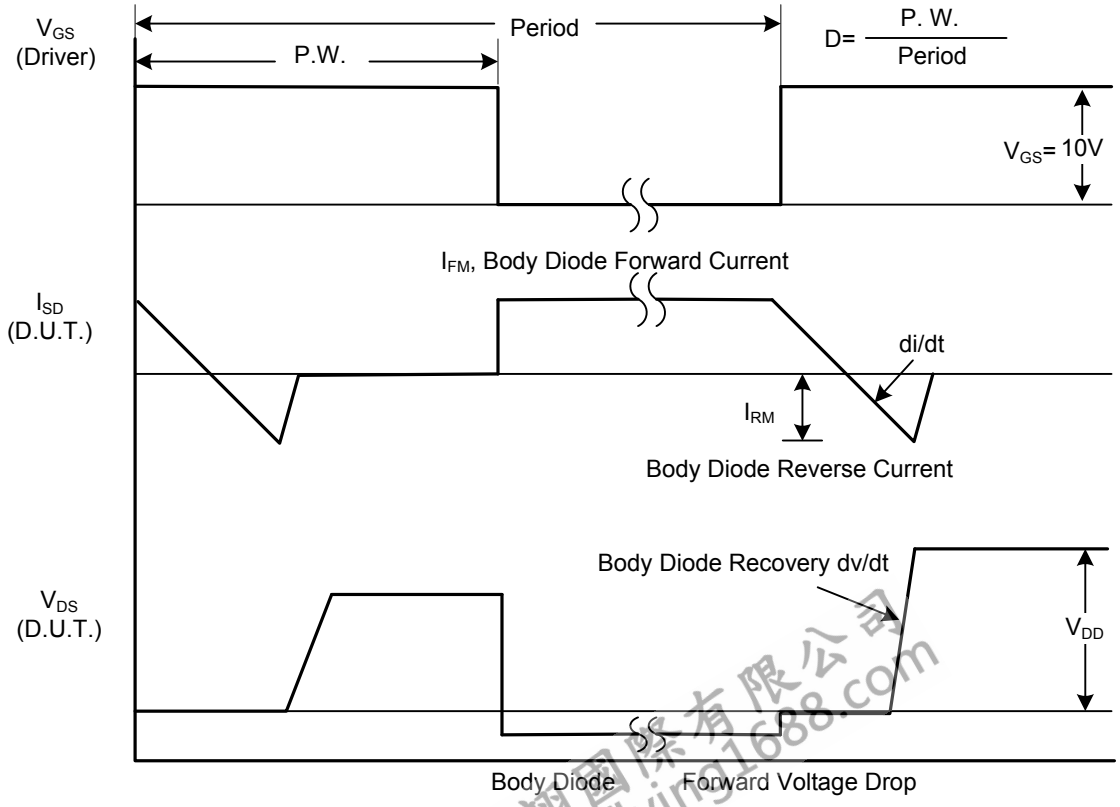

Peak Diode Recovery dv/dt Waveforms

■ TEST CIRCUITS AND WAVEFORMS

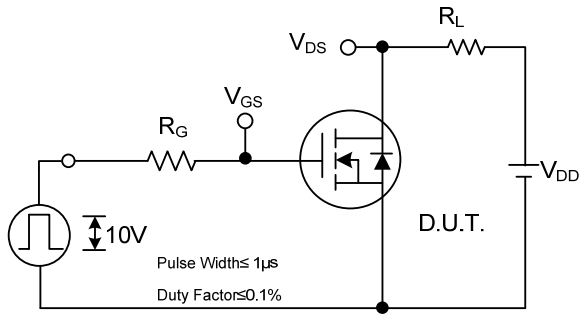

Switching Test Circuit

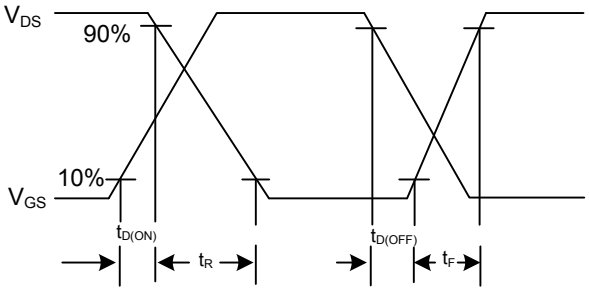

Switching Waveforms

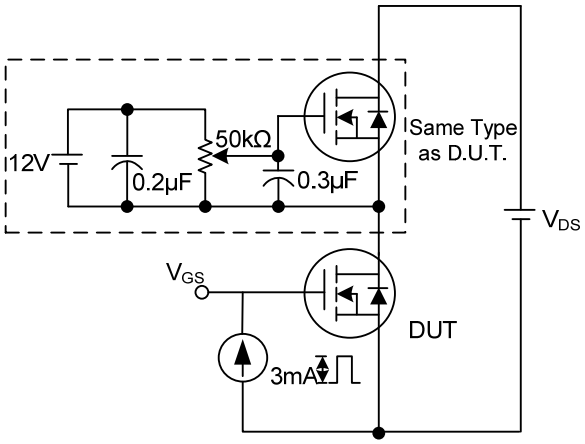

Gate Charge Test Circuit

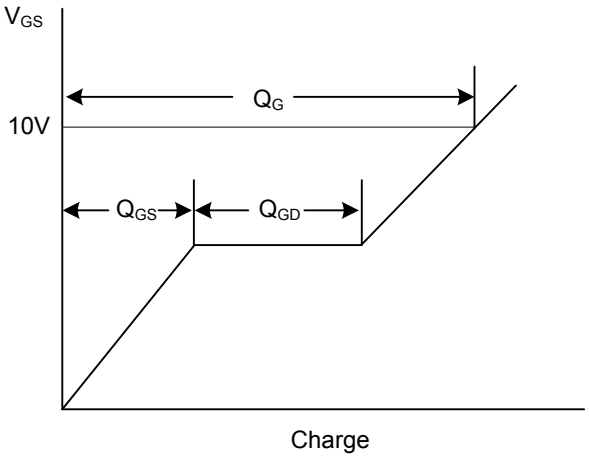

Gate Charge Waveform

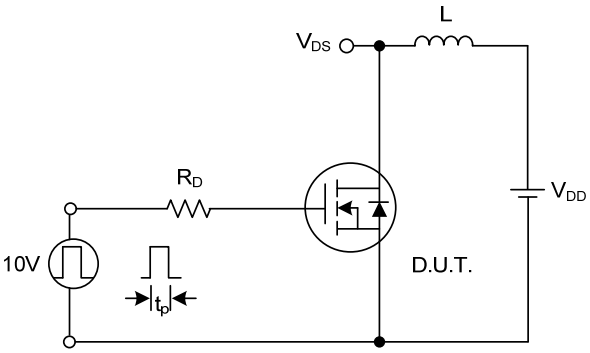

Unclamped Inductive Switching Test Circuit

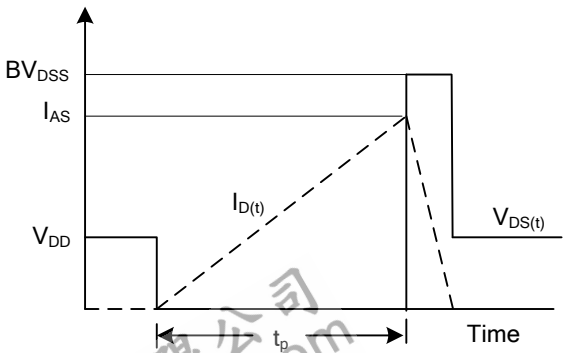

Unclamped Inductive Switching Waveforms

■ TYPICAL CHARACTERISTICS

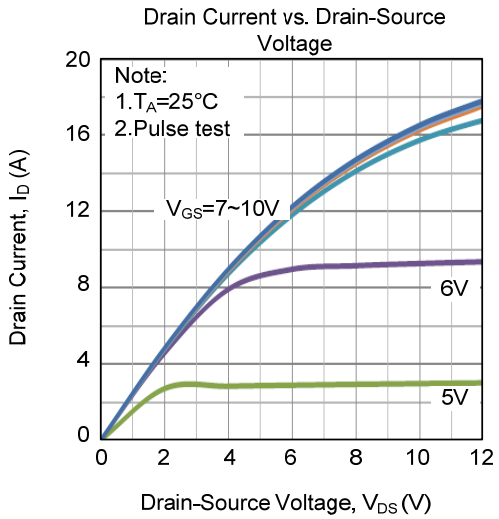

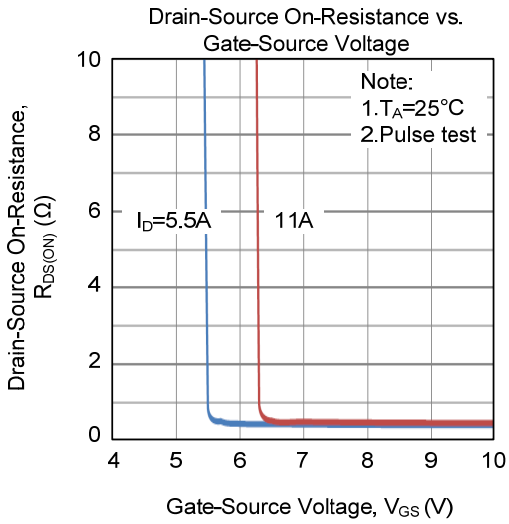

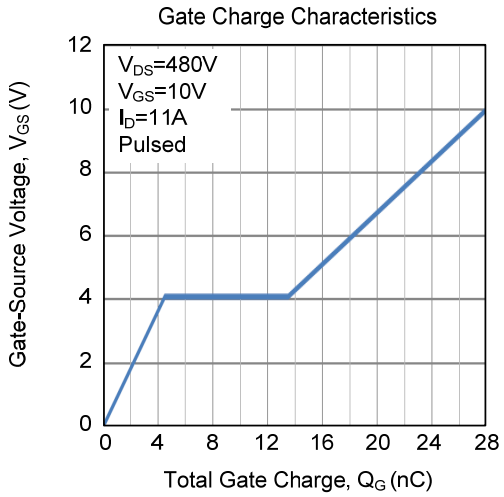

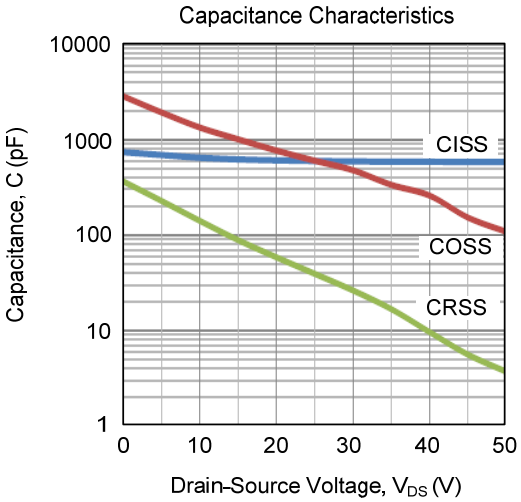

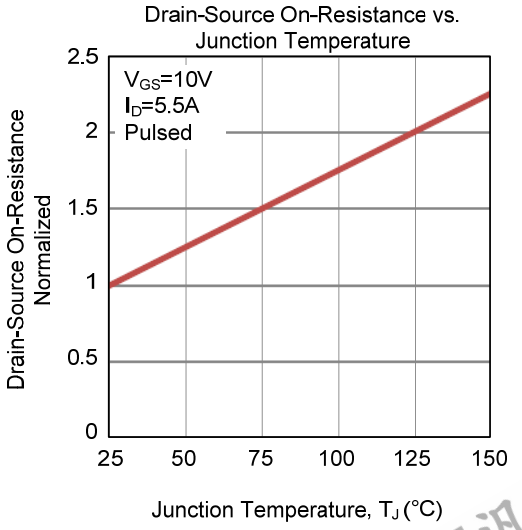

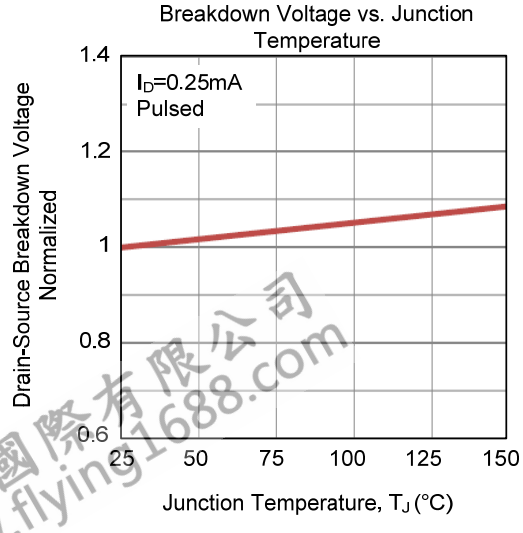

■ TYPICAL CHARACTERISTICS (Cont.)

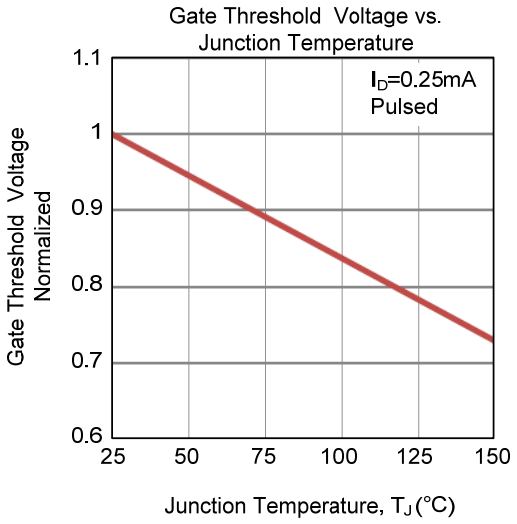

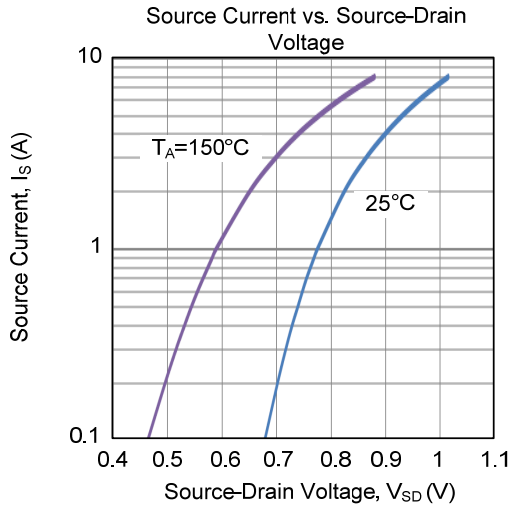

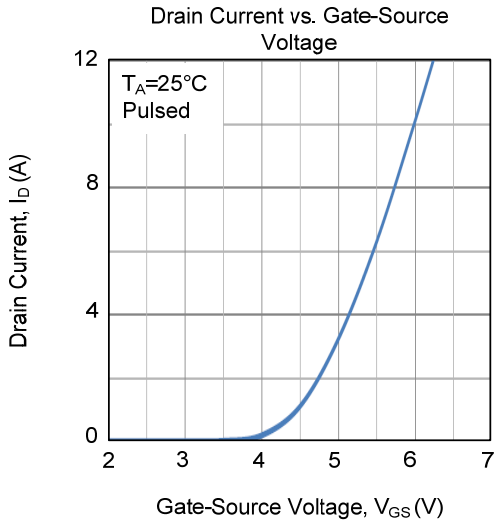

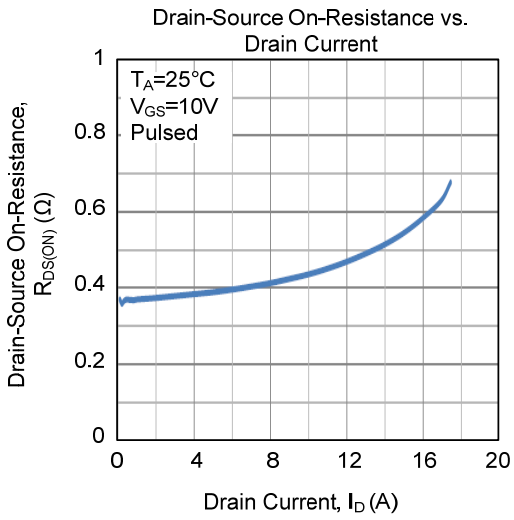

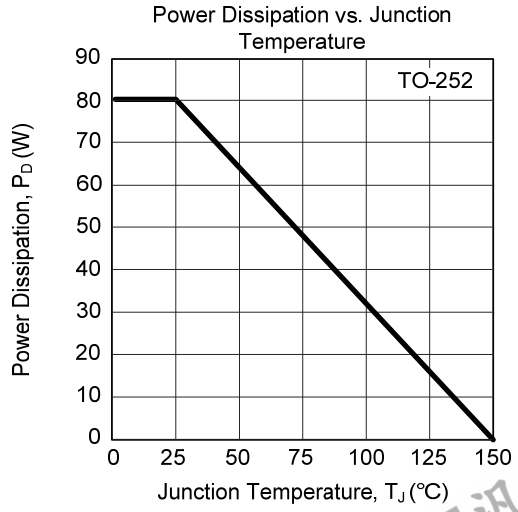

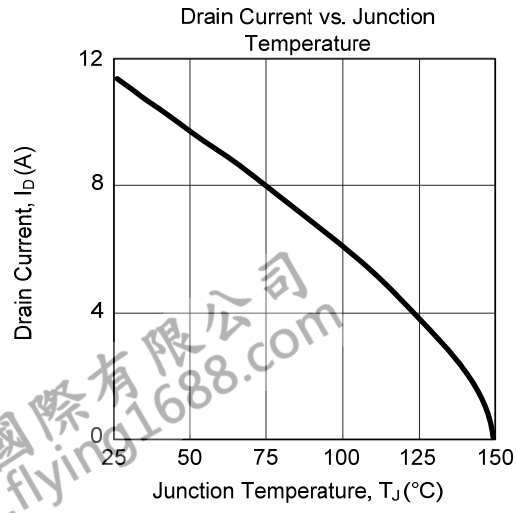

■ TYPICAL CHARACTERISTICS (Cont.)