6 TONES SIREN/ALARM SOUND GENERATOR WITH SOFT CHIRP

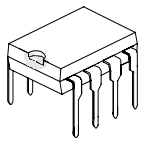

DIP-8

*Pb-free plating product number: 1616L

DESCRIPTION

The UTC 1616 is a CMOS design for 6 different alarm sounds application. The sound of UTC 1616 will be generated in cycling sequence. The soft chirp is only generated within 200ms of the 1st sound.

By the way, UTC 1616 is also partitioned for single tone siren/alarm sound generator with soft chirp, 1616A. The types of UTC 1616 Series are listed as following.

1616: 6 tones with 200ms soft chirp in the 1st sound.
1616A: Single tone with 200ms soft chirp on chip.

FEATURES

* Low operating voltage: 2V ~ 5V.
* On-chip RC oscillator.
* Low stand by current.
* CMOS process.

PIN CONFIGURATION

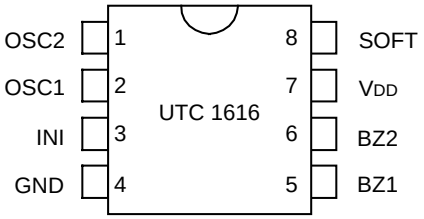

PIN DESCRIPTIONS

Pin No	Symbol	I/O	Function
1	OSC2	I	Oscillator pin with external resistor.
2	OSC1	O	
3	INI	I	An internal pull-up resistor. Might disable BZ1, BZ2, when connected to GND.
4	GND	-	Power supply pin (-).
5	BZ1	O	Audio output pins.
6	BZ2	O	
7	V_{DD}	-	Power supply pin (+) .
8	SOFT	I	SOFT = V_{DD} : 6 tones (1616)/single tone (1616A) with soft chirp. SOFT = OPEN : 6 tones (1616)/single tone (1616A) without soft chirp.

ABSOLUTE MAXIMUM RATINGS

PARAMETER	SYMBOL	RATINGS	UNIT
Supply Voltage	V_{DD}	-0.3 ~ 6	V
Input Voltage	Vi	-0.3 ~ V_{DD}+0.3	V
Output Voltage	Vo	-0.3 ~ V_{DD}+0.3	V
Operating Temperature	Topr	0 ~ 65	°C
Storage Temperature	Tstg	-40 ~ 125	°C

ELECTRICAL CHARACTERISTICS (Unless otherwise specified: V_{DD}=3V , Ta=25°C)

PARAMETER	SYMBOL	MIN.	TYP.	MAX.	UNIT
Operating Voltage	V_{DD}	2	3	5	V
Operating Current	Iop		300	500	uA
BZ1, BZ2 Driving Current	Ioh	1			mA
	Iol	1			mA
Operating Frequency	Fop	70	80	128	K Hz

APPLICATION CIRCUIT (I)

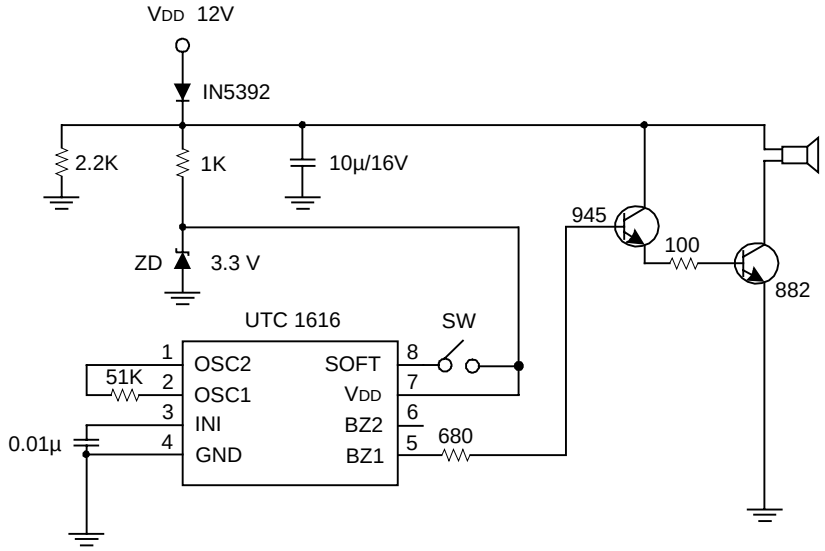

APPLICATION CIRCUIT (II)