1A, 650V N-CHANNEL POWER MOSFET

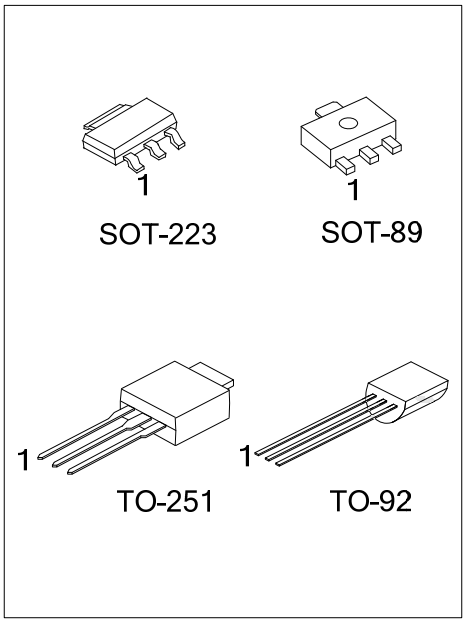

■ DESCRIPTION

The UTC **1N65-KW** is a high voltage MOSFET and is designed to have better characteristics, such as fast switching time, low gate charge, low on-state resistance and have a high rugged avalanche characteristics. This power MOSFET is usually used at high speed switching applications in power supplies, PWM motor controls, high efficient DC to DC converters and bridge circuits.

■ FEATURES

* $R_{DS(ON)}$ < 15Ω @ V_{GS}=10V, I_D=0.5A
* Fast switching capability
* Avalanche energy specified
* Improved dv/dt capability, high ruggedness

■ SYMBOL

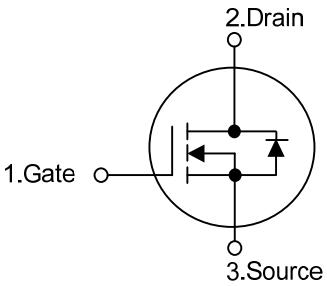

■ ORDERING INFORMATION

Ordering Number		Package	Pin Assignment			Packing
Lead Free	Halogen Free		1	2	3	
-	1N65G-AA3-R	SOT-223	G	D	S	Tape Reel
-	1N65G-AB3-R	SOT-89	G	D	S	Tape Reel
1N65L-TM3-T	1N65G-TM3-T	TO-251	G	D	S	Tube
1N65L-T92-B	1N65G-T92-B	TO-92	G	D	S	Tape Box
1N65L-T92-K	1N65G-T92-K	TO-92	G	D	S	Bulk

Note: Pin Assignment: G: Gate D: Drain S: Source

1N65G-AA3-R
- (1)Packing Type
- (2)Package Type
- (3)Green Package

(1) T: Tube, R: Tape Reel, B: Tape Box, K: Bulk
(2) AA3: SOT-223, AB3: SOT-89, TM3: TO-251
T92: TO-92
(3) L: Lead Free, G: Halogen Free and Lead Free

■ MARKING

SOT-223	SOT-89
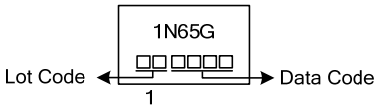	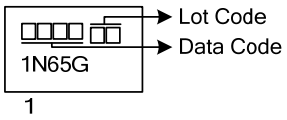
TO-251	**TO-92**
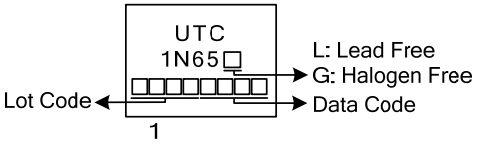	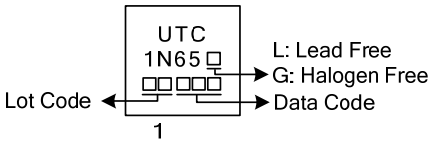

■ ABSOLUTE MAXIMUM RATINGS (T_C = 25°C, unless otherwise specified)

PARAMETER		SYMBOL	RATINGS	UNIT
Drain-Source Voltage		V_{DSS}	650	V
Gate-Source Voltage		V_{GSS}	±30	V
Continuous Drain Current		I_D	1	A
Avalanche Energy	Single Pulsed (Note 2)	E_{AS}	23	mJ
Peak Diode Recovery dv/dt (Note 3)		dv/dt	4.5	V/ns
Power Dissipation (T_A=25°C)	SOT-89	P_D	0.69	W
	SOT-223		0.8	W
	TO-251		1.1	W
	TO-92		0.6	W
Junction Temperature		T_J	+150	°C
Operating Temperature		T_{OPR}	-55 ~ +150	°C
Storage Temperature		T_{STG}	-55 ~ +150	°C

Notes: 1. Absolute maximum ratings are those values beyond which the device could be permanently damaged. Absolute maximum ratings are stress ratings only and functional device operation is not implied.
2. L = 46mH, I_{AS} = 1A, V_{DD} = 50V, R_G = 25Ω, Starting T_J = 25°C
3. I_{SD} ≤ 1.2A, di/dt ≤ 200A/μs, V_{DD} ≤ BV_{DSS}, Starting T_J = 25°C

■ THERMAL DATA

PARAMETER		SYMBOL	RATINGS	UNIT
Junction to Ambient	SOT-89	θ_{JA}	180	°C/W
	SOT-223		150	°C/W
	TO-251		110	°C/W
	TO-92		180	°C/W
Junction to Case	SOT-89	θ_{JC}	38	°C/W
	SOT-223		14	°C/W
	TO-251		4.53	°C/W
	TO-92		88	°C/W

■ ELECTRICAL CHARACTERISTICS (T_C=25°C, unless otherwise specified.)

PARAMETER		SYMBOL	TEST CONDITIONS	MIN	TYP	MAX	UNIT
OFF CHARACTERISTICS							
Drain-Source Breakdown Voltage		BV_{DSS}	V_{GS}=0V, I_D=250μA	650			V
Drain-Source Leakage Current		I_{DSS}	V_{DS}=650V, V_{GS}=0V			10	μA
Gate-Source Leakage Current	Forward	I_{GSS}	V_{GS}=30V, V_{DS}=0V			100	nA
	Reverse		V_{GS}=-30V, V_{DS}=0V			-100	nA
Breakdown Voltage Temperature Coefficient		$\triangle BV_{DSS}/\triangle T_J$	I_D=250μA		0.4		V/°C
ON CHARACTERISTICS							
Gate Threshold Voltage		$V_{GS(TH)}$	V_{DS}=V_{GS}, I_D=250μA	2.0		4.0	V
Static Drain-Source On-State Resistance		$R_{DS(ON)}$	V_{GS}=10V, I_D=0.5A		12	15	Ω
DYNAMIC CHARACTERISTICS							
Input Capacitance		C_{ISS}	V_{DS}=25V, V_{GS}=0V, f=1MHz		150		pF
Output Capacitance		C_{OSS}			17.5		pF
Reverse Transfer Capacitance		C_{RSS}			4.6		pF
SWITCHING CHARACTERISTICS							
Total Gate Charge		Q_G	V_{DS}=50V, I_D=1.3A, R_G=3.3kΩ V_{GS}=10V, (Note 2,3)		8		nC
Gate-Source Charge		Q_{GS}			1.8		nC
Gate-Drain Charge		Q_{GD}			1.3		nC
Turn-On Delay Time		$t_{D(ON)}$	V_{DD}=30V, I_D=1A, R_G=25Ω, V_{GS}=10V (Note 2,3)		15		ns
Turn-On Rise Time		t_R			30		ns
Turn-Off Delay Time		$t_{D(OFF)}$			26		ns
Turn-Off Fall Time		t_F			35		ns
SOURCE-DRAIN DIODE RATINGS AND CHARACTERISTICS							
Drain-Source Diode Forward Voltage		V_{SD}	V_{GS}=0V, I_S =1A			1.4	V
Maximum Continuous Drain-Source Diode Forward Current		I_S				1.0	A
Maximum Pulsed Drain-Source Diode Forward Current		I_{SM}				4.0	A

Notes: 1. Repetitive Rating: Pulse width limited by maximum junction temperature
2. Pulse Test: Pulse Width ≤300μs, Duty Cycle≤2%
3. Essentially Independent of Operating Temperature

■ TEST CIRCUITS AND WAVEFORMS

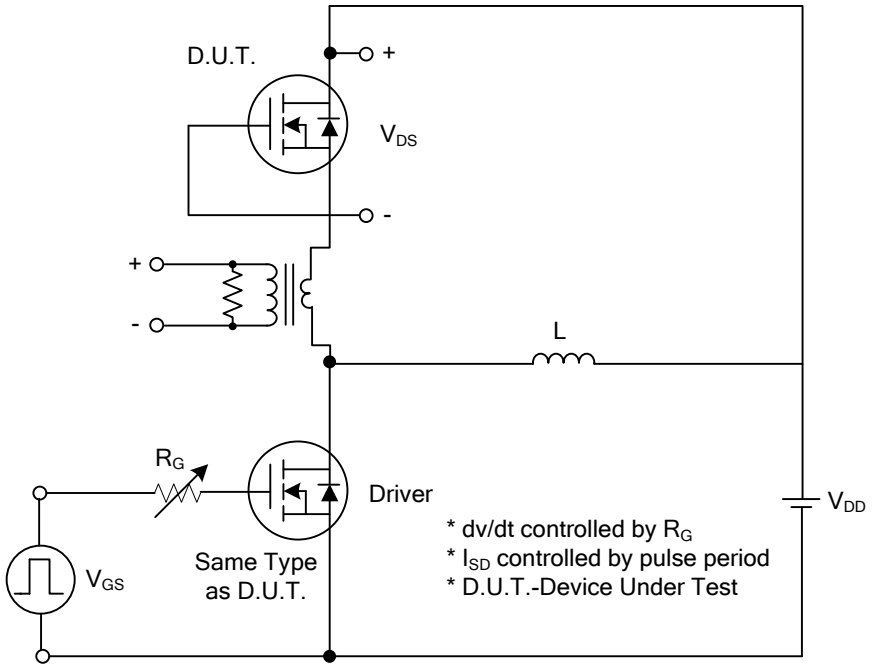

Peak Diode Recovery dv/dt Test Circuit

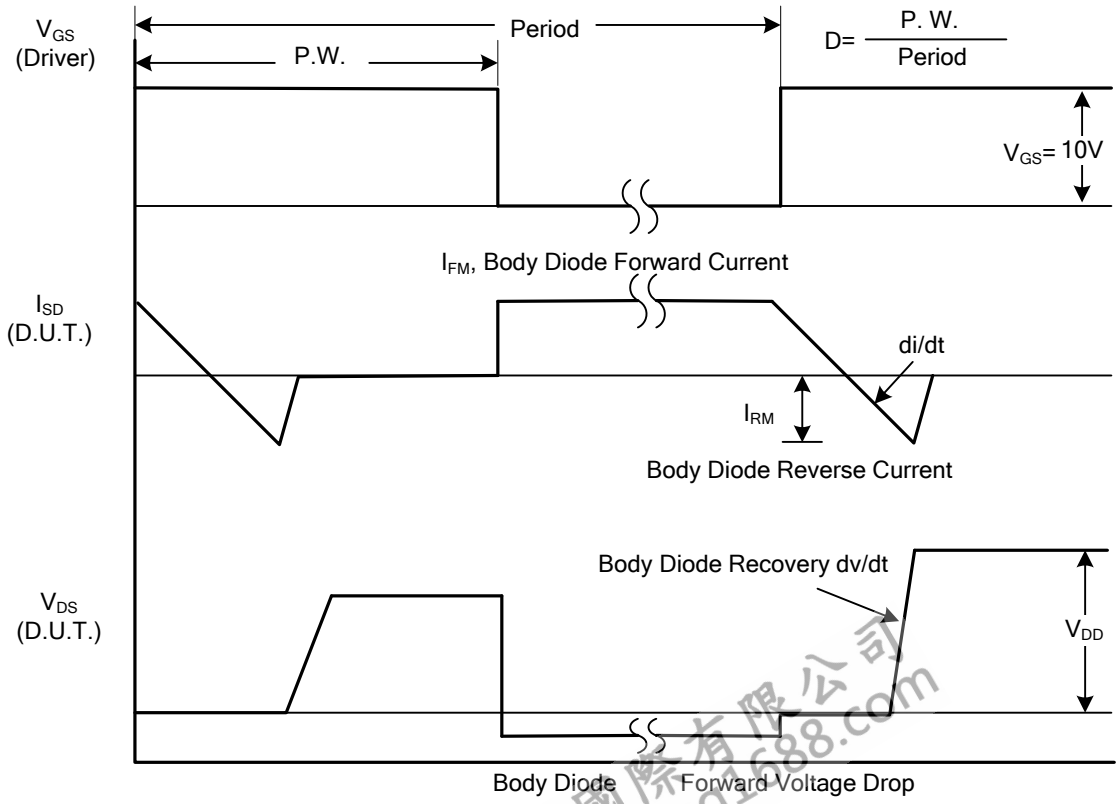

Peak Diode Recovery dv/dt Waveforms

■ TEST CIRCUITS AND WAVEFORMS (Cont.)

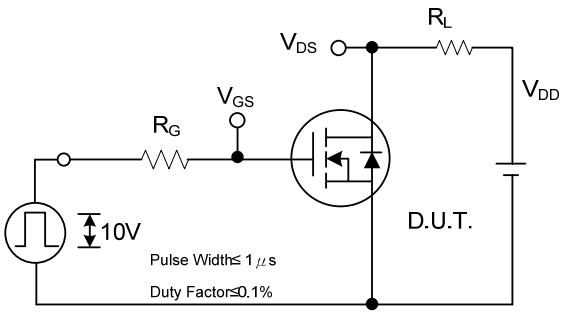

Switching Test Circuit

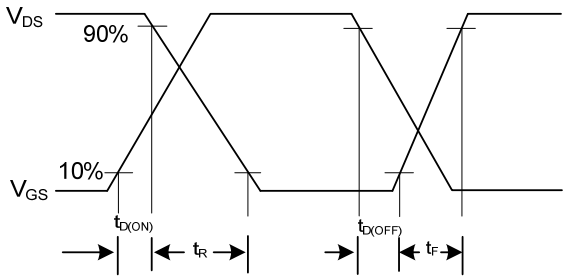

Switching Waveforms

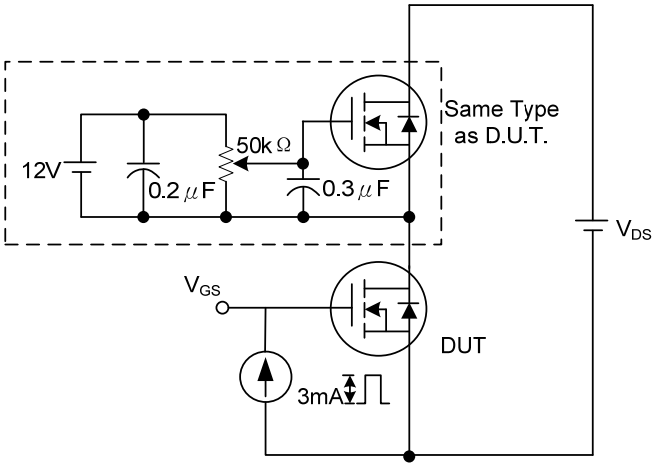

Gate Charge Test Circuit

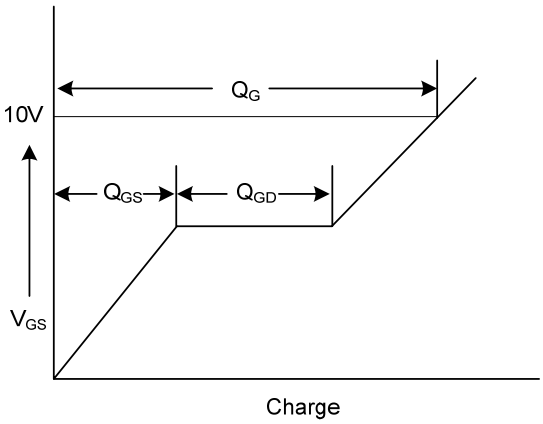

Gate Charge Waveform

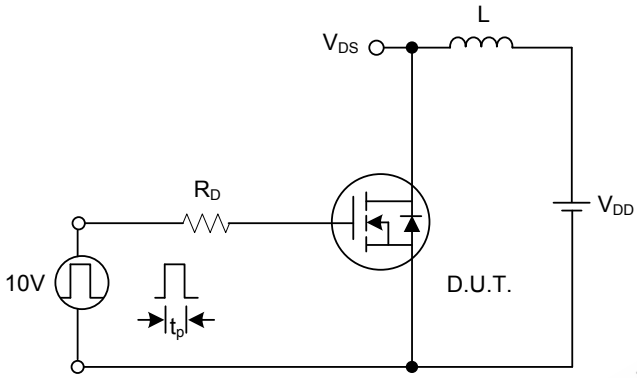

Unclamped Inductive Switching Test Circuit

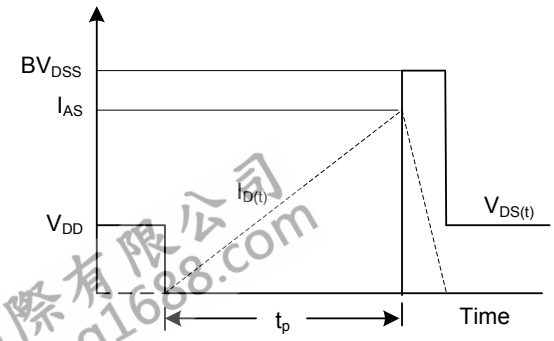

Unclamped Inductive Switching Waveforms