21A, 600V N-CHANNEL SUPER-JUNCTION MOSFET

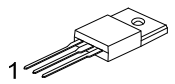

TO-220F

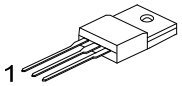

TO-220F1

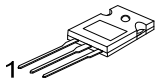

TO-247

■ DESCRIPTION

The **UTC 21NM60-F** is a Super Junction MOSFET Structure and is designed to have better characteristics, such as fast switching time, low gate charge, low on-state resistance and a high rugged avalanche characteristics. This power MOSFET is usually used at AC-DC converters for power applications.

■ FEATURES

* $R_{DS(ON)} \leq 0.19\Omega$ @ V_{GS}=10V, I_D=10.5A
* By using Super Junction Structure
* Fast Switching
* With 100% Avalanche Tested

■ SYMBOL

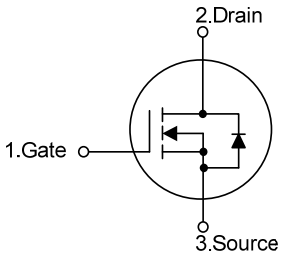

■ ORDERING INFORMATION

Ordering Number		Package	Pin Assignment			Packing
Lead Free	Halogen Free		1	2	3	
21NM60L-TF1-T	21NM60G-TF1-T	TO-220F1	G	D	S	Tube
21NM60L-TF3-T	21NM60G-TF3-T	TO-220F	G	D	S	Tube
21NM60L-T47-T	21NM60G-T47-T	TO-247	G	D	S	Tube

Note: Pin Assignment: G: Gate D: Drain S: Source

21NM60G-TF1-T (1)Packing Type (2)Package Type (3)Green Package	(1) T: Tube, R: Tape Reel (2) TF1: TO-220F1, TF3: TO-220F, T47: TO-247 (3) G: Halogen Free and Lead Free, L: Lead Free

■ MARKING

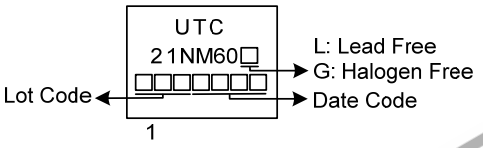

■ ABSOLUTE MAXIMUM RATINGS (T_C=25°C, unless otherwise specified)

PARAMETER		SYMBOL	RATINGS	UNIT
Drain-Source Voltage		V_{DSS}	600	V
Gate-Source Voltage		V_{GSS}	±30	V
Drain Current	Continuous	I_D	21	A
	Pulsed (Note 2)	I_{DM}	42	A
Avalanche Energy	Single Pulsed (Note 3)	E_{AS}	224.5	mJ
Peak Diode Recovery dv/dt (Note 4)		dv/dt	7.5	V/ns
Power Dissipation	TO-220F/TO-220F1	P_D	33	W
	TO-247		180	W
Junction Temperature		T_J	+150	°C
Storage Temperature		T_{STG}	-55 ~ +150	°C

Notes: 1. Absolute maximum ratings are those values beyond which the device could be permanently damaged. Absolute maximum ratings are stress ratings only and functional device operation is not implied.
2. Repetitive Rating: Pulse width limited by maximum junction temperature.
3. L =10mH, I_{AS} = 6.7A, V_{DD} = 50V, R_G = 25Ω, Starting T_J = 25°C
4. I_{SD} ≤ 21A, di/dt ≤ 200A/μs, V_{DD} ≤ BV_{DSS}, Starting T_J = 25°C

■ THERMAL DATA

PARAMETER		SYMBOL	RATINGS	UNIT
Junction to Ambient	TO-220F/TO-220F1	θ_{JA}	62.5	°C/W
	TO-247		60	°C/W
Junction to Case	TO-220F/TO-220F1	θ_{JC}	3.78	°C/W
	TO-247		0.69	°C/W

■ ELECTRICAL CHARACTERISTICS (T_J=25°C, unless otherwise specified)

PARAMETER		SYMBOL	TEST CONDITIONS	MIN	TYP	MAX	UNIT
OFF CHARACTERISTICS							
Drain-Source Breakdown Voltage		BV_{DSS}	V_{GS}=0V, I_D=250μA	600			V
Drain-Source Leakage Current		I_{DSS}	V_{DS}=600V, V_{GS}=0V			10	μA
Gate- Source Leakage Current	Forward	I_{GSS}	V_{GS} = 30V, V_{DS} = 0V			100	nA
	Reverse		V_{GS} = -30V, V_{DS} = 0V			-100	nA
ON CHARACTERISTICS							
Gate Threshold Voltage		$V_{GS(TH)}$	V_{DS}=V_{GS}, I_D=250μA	2.5		4.5	V
Static Drain-Source On-State Resistance		$R_{DS(ON)}$	V_{GS}=10V, I_D=10.5A			0.19	Ω
DYNAMIC CHARACTERISTICS							
Input Capacitance		C_{ISS}	V_{DS}=25V, V_{GS}=0V, f=1.0MHz		1530		pF
Output Capacitance		C_{OSS}			1200		pF
Reverse Transfer Capacitance		C_{RSS}			120		pF
SWITCHING CHARACTERISTICS							
Total Gate Charge		Q_G	V_{DS}=480V, V_{GS}=10V, I_D=21A I_G=1mA (Note1,2)		57		nC
Gate-Source Charge		Q_{GS}			8		nC
Gate-Drain Charge		Q_{GD}			22		nC
Turn-On Delay Time		$t_{D(ON)}$	V_{DS}=100V, V_{GS}=10V, I_D=21A, R_G=25Ω (Note1,2)		22		ns
Turn-On Rise Time		t_R			31		ns
Turn-Off Delay Time		$t_{D(OFF)}$			205		ns
Turn-Off Fall Time		t_F			95		ns
DRAIN-SOURCE DIODE CHARACTERISTICS AND MAXIMUM RATINGS							
Maximum Body-Diode Continuous Current		I_S				21	A
Maximum Body-Diode Pulsed Current		I_{SM}				42	A
Drain-Source Diode Forward Voltage		V_{SD}	V_{GS}=0V, I_S=21A			1.4	V
Reverse Recovery Time		t_{rr}	V_{GS}=0V, I_S=21A, dI_F/dt=100A/μs(Note1)		420		ns
Reverse Recovery Charge		Q_{rr}			5.4		μC

Notes: 1. Pulse Test : Pulse width ≤ 300μs, Duty cycle ≤ 2%.
2. Essentially independent of operating ambient temperature.

■ TEST CIRCUITS AND WAVEFORMS

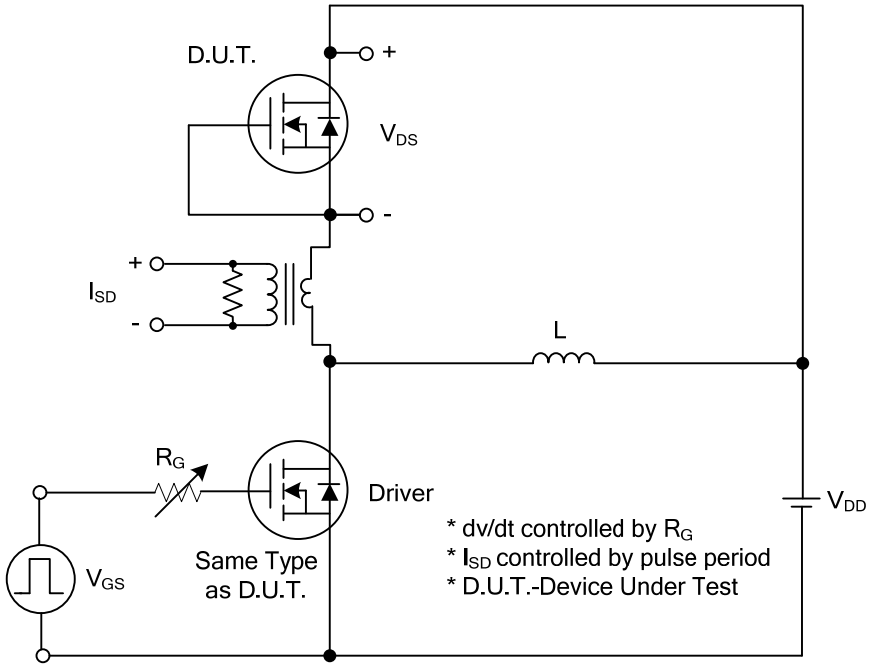

Peak Diode Recovery dv/dt Test Circuit

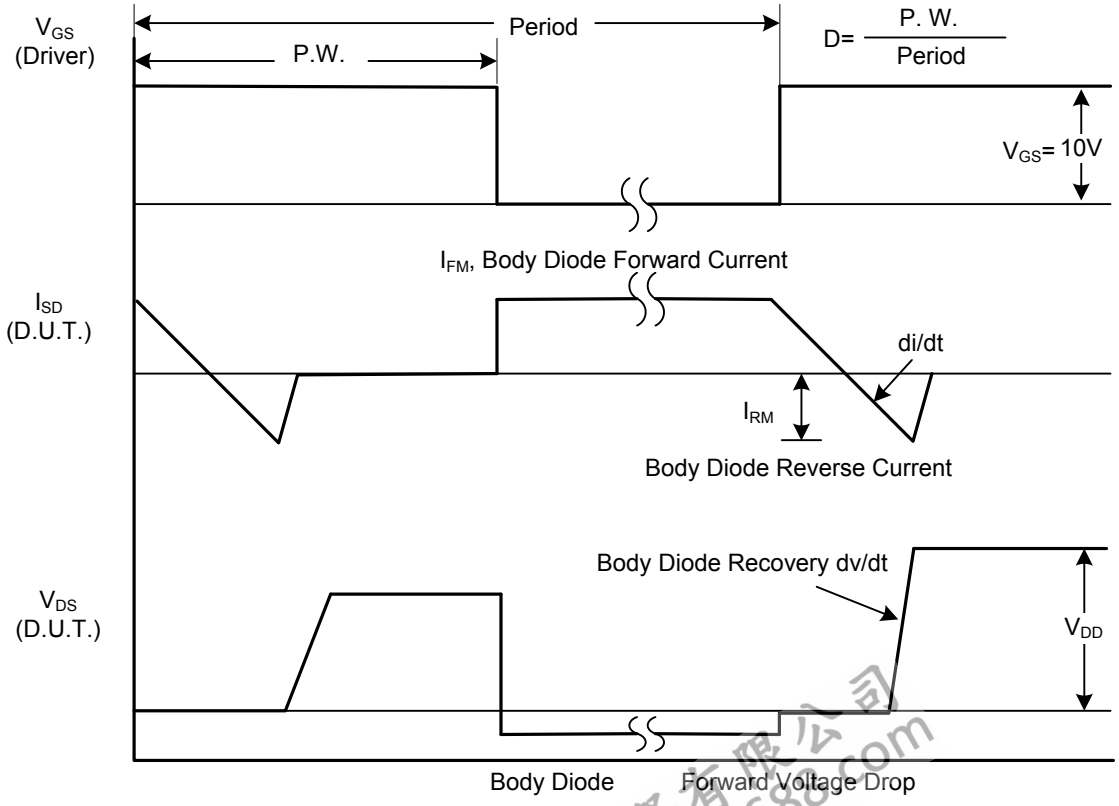

Peak Diode Recovery dv/dt Waveforms

■ TEST CIRCUITS AND WAVEFORMS

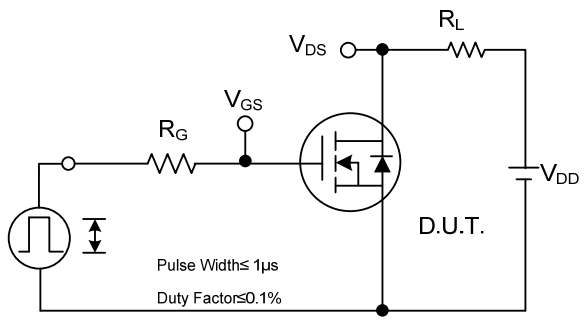

Switching Test Circuit

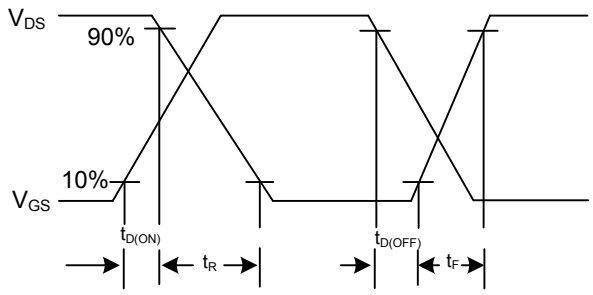

Switching Waveforms

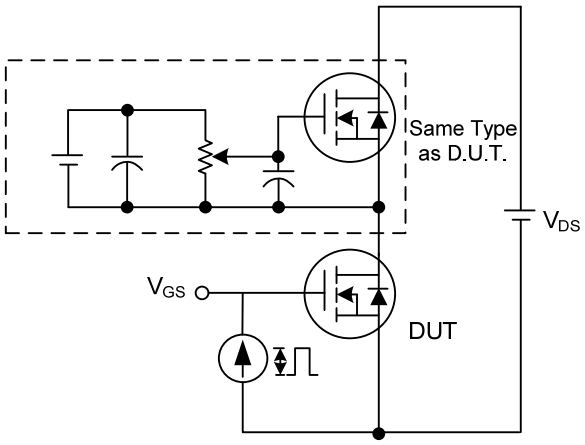

Gate Charge Test Circuit

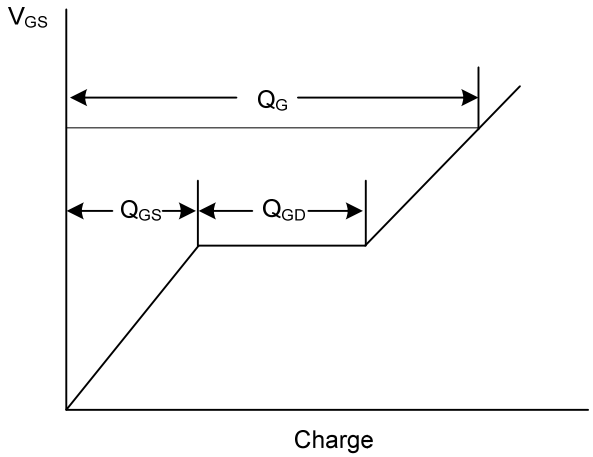

Gate Charge Waveform

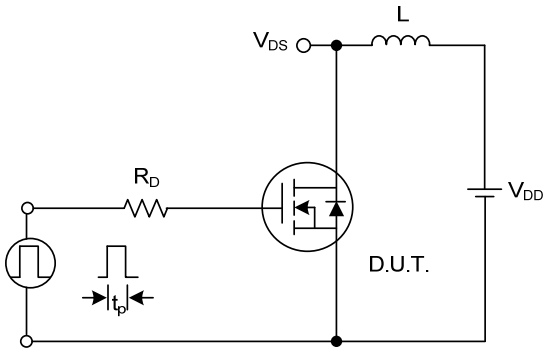

Unclamped Inductive Switching Test Circuit

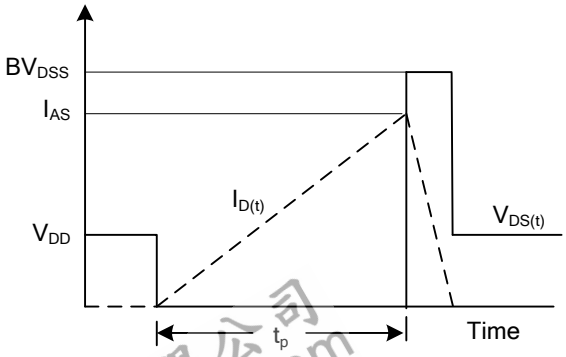

Unclamped Inductive Switching Waveforms

■ TYPICAL CHARACTERISTICS

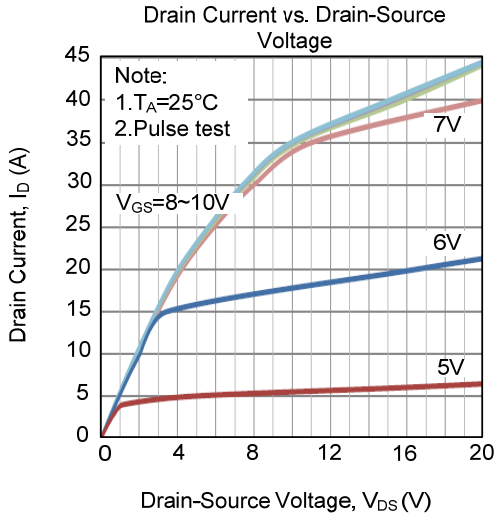

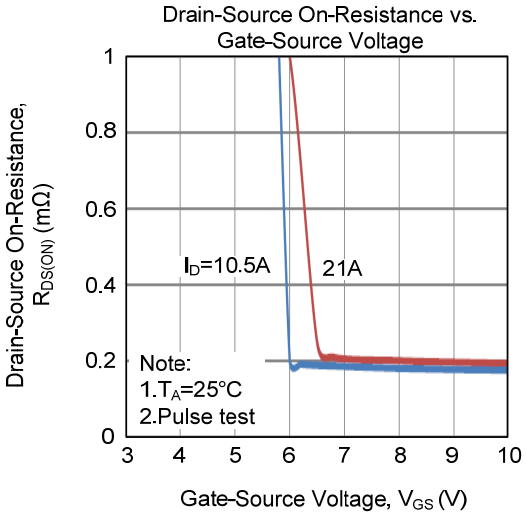

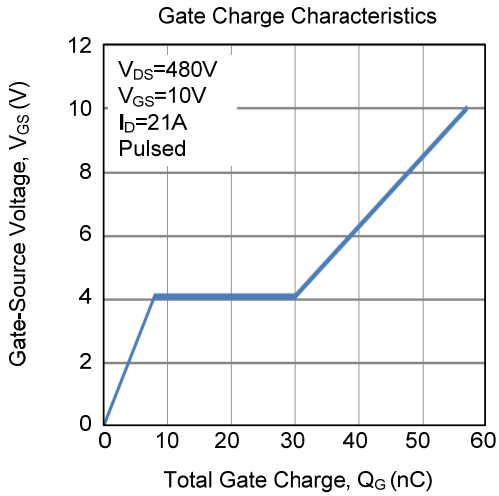

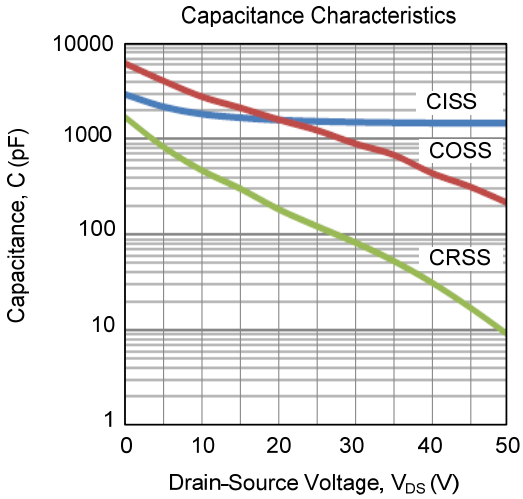

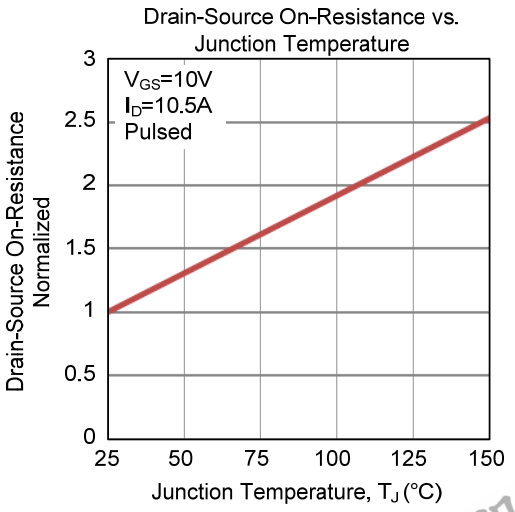

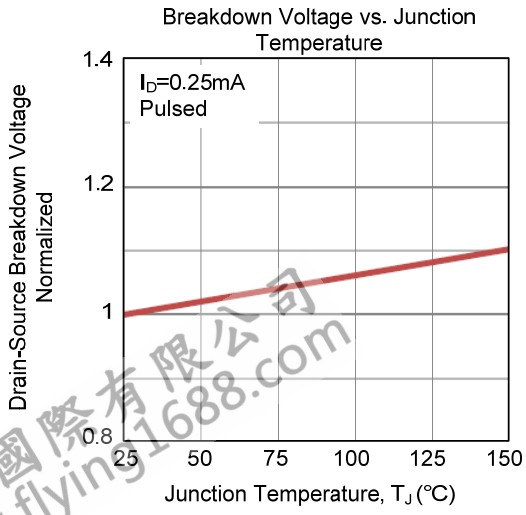

■ TYPICAL CHARACTERISTICS (Cont.)

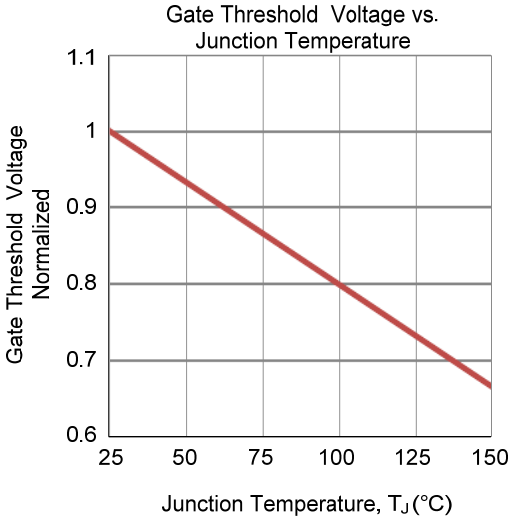

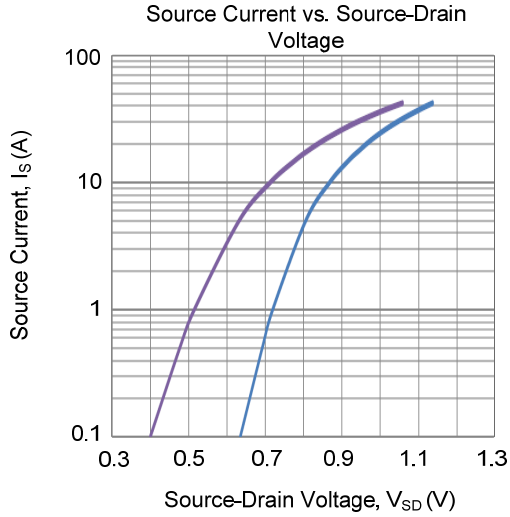

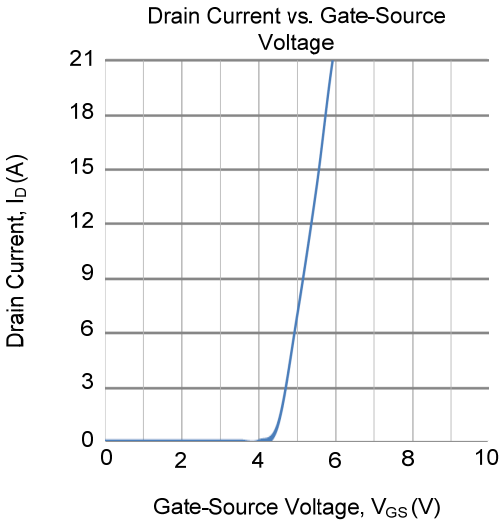

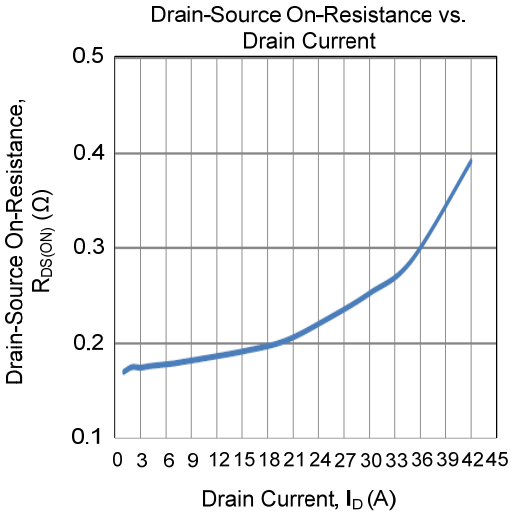

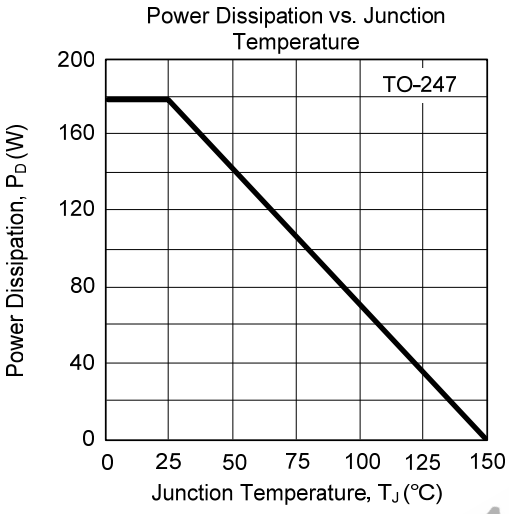

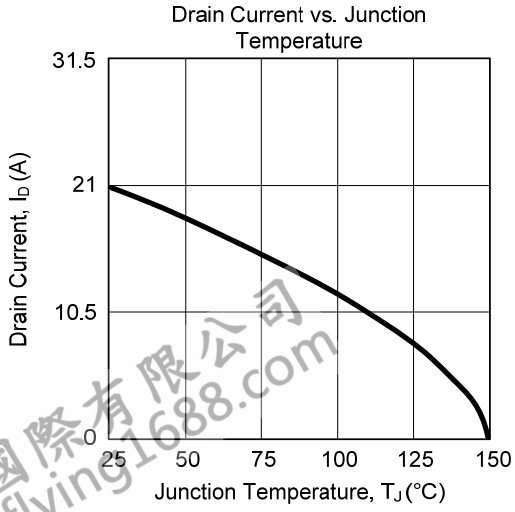

■ TYPICAL CHARACTERISTICS (Cont.)