2A, 650V N-CHANNEL SUPER-JUNCTION MOSFET

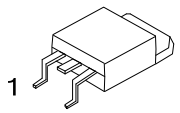

TO-252

■ DESCRIPTION

The UTC **2NM65-FDQ** is a Super Junction MOSFET Structure. It uses UTC advanced planar stripe, DMOS technology to provide customers perfect switching performance, minimal on-state resistance.

The UTC **2NM65-FDQ** is universally applied in electronic lamp ballasts based on half bridge topology, high efficiency switched mode power supplies, active power factor correction, etc.

■ FEATURES

* $R_{DS(ON)}$ < 3.0 Ω @ V_{GS} = 10V, I_D =1.0A
* Fast switching capability
* Avalanche energy specified
* Improved dv/dt capability, high ruggedness

■ SYMBOL

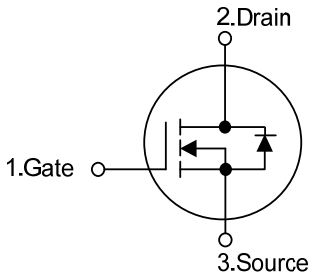

■ ORDERING INFORMATION

Ordering Number		Package	Pin Assignment			Packing
Lead Free	Halogen Free		1	2	3	
2NM65L-TN3-R	2NM65G-TN3-R	TO-252	G	D	S	Tape Reel

Note: Pin Assignment: G: Gate D: Drain S: Source

2NM65G-TN3-R (1)Packing Type (2)Package Type (3)Green Package	(1) R: Tape Reel (2) TN3: TO-252 (3) G: Halogen Free and Lead Free L: Lead Free

■ MARKING

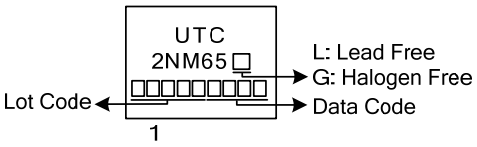

■ ABSOLUTE MAXIMUM RATINGS (T_C = 25°C, unless otherwise specified)

PARAMETER		SYMBOL	RATINGS	UNIT
Drain-Source Voltage		V_{DSS}	650	V
Gate-Source Voltage		V_{GSS}	±30	V
Drain Current	Continuous	I_D	2	A
	Pulsed (Note 2)	I_{DM}	6	A
Avalanche Energy	Single Pulsed (Note 3)	E_{AS}	72	mJ
Peak Diode Recovery dv/dt (Note 4)		dv/dt	8	V/ns
Power Dissipation		P_D	44	W
Junction Temperature		T_J	+150	°C
Storage Temperature		T_{STG}	-55 ~ +150	°C

Notes: 1. Absolute maximum ratings are those values beyond which the device could be permanently damaged. Absolute maximum ratings are stress ratings only and functional device operation is not implied.
2. Repetitive Rating: Pulse width limited by maximum junction temperature.
3. L=144mH, I_{AS}=1.0A, V_{DD}=50V, R_G=25 Ω, Starting T_J = 25°C
4. I_{SD}≤2.0A, di/dt≤200A/μs, V_{DD} ≤ BV_{DSS}, Starting T_J = 25°C

■ THERMAL DATA

PARAMETER	SYMBOL	RATINGS	UNIT
Junction to Ambient	θ_{JA}	100	°C/W
Junction to Case	θ_{JC}	2.8	°C/W

■ ELECTRICAL CHARACTERISTICS (T_J =25°C, unless otherwise specified)

PARAMETER		SYMBOL	TEST CONDITIONS	MIN	TYP	MAX	UNIT
OFF CHARACTERISTICS							
Drain-Source Breakdown Voltage		BV_{DSS}	V_{GS} = 0V, I_D = 250μA	650			V
Drain-Source Leakage Current		I_{DSS}	V_{DS} = 650V, V_{GS} = 0V			10	μA
Gate-Source Leakage Current	Forward	I_{GSS}	V_{GS} = 30V, V_{DS} = 0V			100	nA
	Reverse		V_{GS} = -30V, V_{DS} = 0V			-100	nA
ON CHARACTERISTICS							
Gate Threshold Voltage		$V_{GS(TH)}$	V_{DS} = V_{GS}, I_D = 250μA	2.5		4.5	V
Static Drain-Source On-State Resistance		$R_{DS(ON)}$	V_{GS} = 10V, I_D =1.0A			3.0	Ω
DYNAMIC CHARACTERISTICS							
Input Capacitance		C_{ISS}	V_{DS} =25V, V_{GS} =0V, f =1MHz		130		pF
Output Capacitance		C_{OSS}			110		pF
Reverse Transfer Capacitance		C_{RSS}			10		pF
SWITCHING CHARACTERISTICS							
Turn-On Delay Time		$t_{D(ON)}$	V_{DD}=300V, V_{GS}=10V, I_D =2.0A, R_G =25Ω (Note 1, 2)		1.2		ns
Turn-On Rise Time		t_R			8.4		ns
Turn-Off Delay Time		$t_{D(OFF)}$			14		ns
Turn-Off Fall Time		t_F			20		ns
DRAIN-SOURCE DIODE CHARACTERISTICS							
Continuous Drain-Source Current		I_S				2.0	A
Maximum Body-Diode Pulsed Current		I_{SM}				6.0	A
Drain-Source Diode Forward Voltage		V_{SD}	I_S=2.0A, V_{GS}=0V			1.4	V
Body Diode Reverse Recovery Time		t_{rr}	I_S=2.0A, V_{GS}=0V dI/dt=100A/μs		110		nS
Body Diode Reverse Recovery Charge		Q_{rr}			0.4		μC

Notes: 1. Pulse Test: Pulse width ≤ 300μs, Duty cycle≤2%.
2. Essentially independent of operating temperature.

■ TEST CIRCUITS AND WAVEFORMS

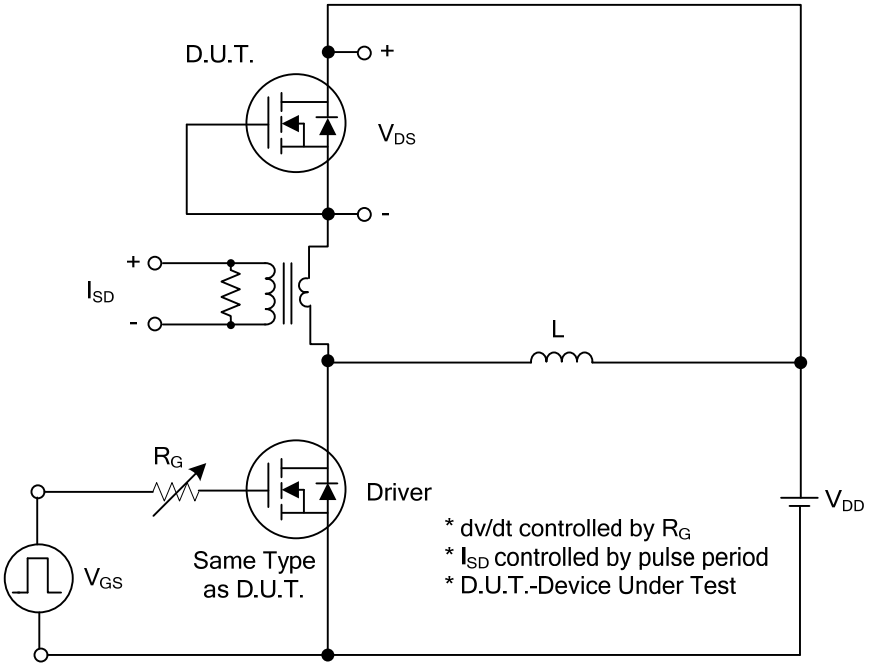

Peak Diode Recovery dv/dt Test Circuit

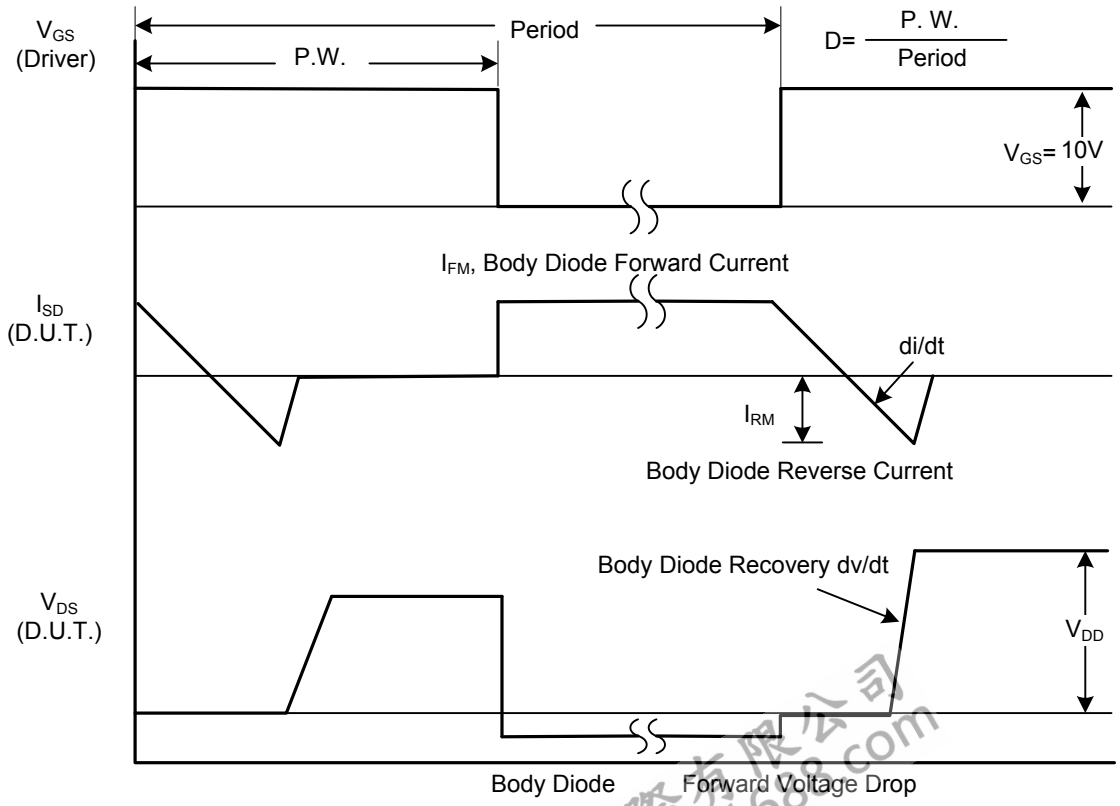

Peak Diode Recovery dv/dt Waveforms

■ TEST CIRCUITS AND WAVEFORMS

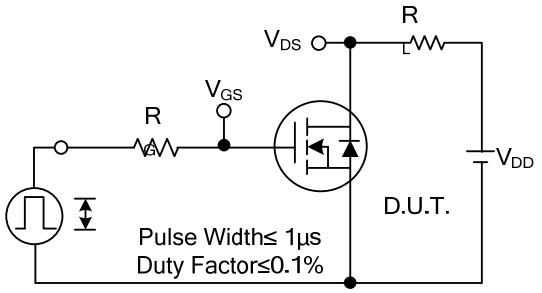

Switching Test Circuit

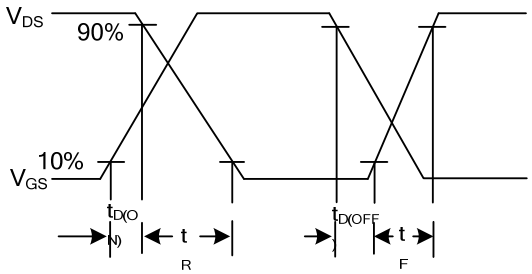

Switching Waveforms

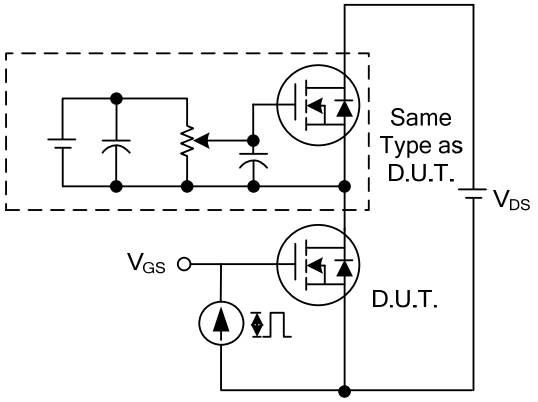

Gate Charge Test Circuit

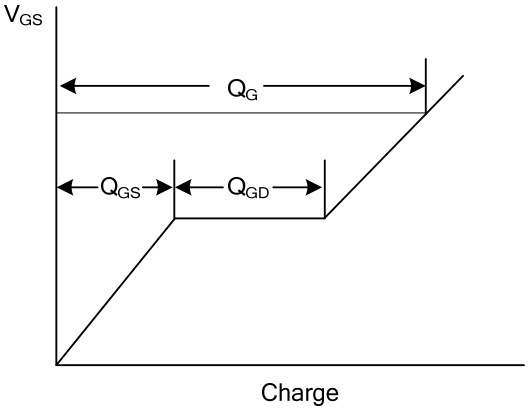

Gate Charge Waveform

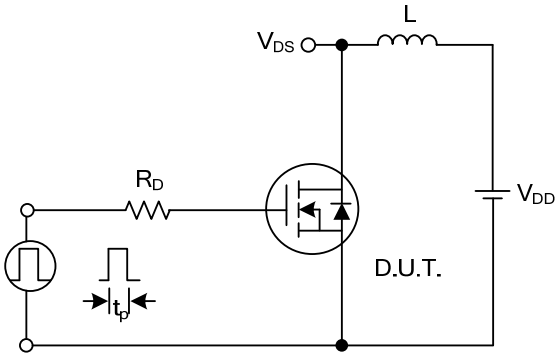

Unclamped Inductive Switching Test Circuit

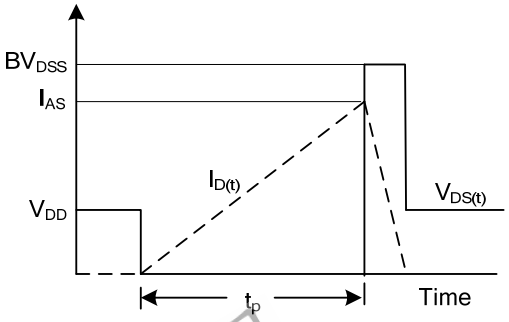

Unclamped Inductive Switching Waveforms

■ TYPICAL CHARACTERISTICS