4A, 500V N-CHANNEL SUPER-JUNCTION MOSFET

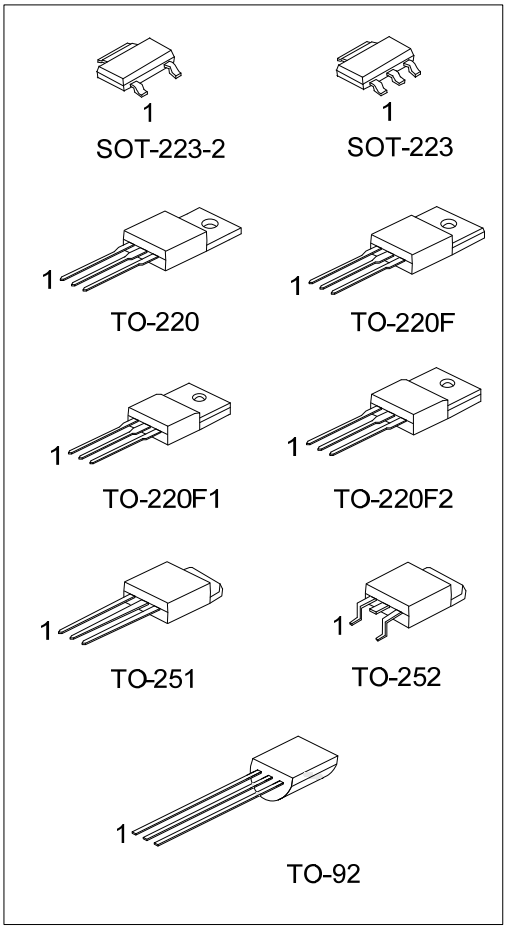

■ DESCRIPTION

The UTC **4NM50** is a high voltage super junction MOSFET and is designed to have better characteristics.

The UTC **4NM50** Utilizing an advanced charge-balance technology, enhance system efficiency, improve EMI and reliability. such as low gate charge, low on-state resistance and have a high power density and high rugged avalanche characteristics. This super junction MOSFET usually used at AC/DC power conversion, and industrial power applications.

■ FEATURES

* $R_{DS(ON)} \leq 1.3\Omega$ @ V_{GS}=10V, I_D=2.0A
* Fast Switching Capability
* Avalanche Energy Tested
* Improved dv/dt Capability, High Ruggedness

■ SYMBOL

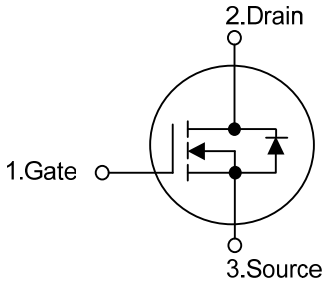

汎翊國際有限公司
www.flying1688.com
FLYING

Copyright © 2019 Unisonic Technologies Co., Ltd

■ ORDERING INFORMATION

Ordering Number		Package	Pin Assignment			Packing
Lead Free	Halogen Free		1	2	3	
4NM50L-AA2-R	4NM50G-AA2-R	SOT-223-2	G	D	S	Tape Reel
4NM50L-AA3-R	4NM50G-AA3-R	SOT-223	G	D	S	Tape Reel
4NM50L-TA3-T	4NM50G-TA3-T	TO-220	G	D	S	Tube
4NM50L-TF1-T	4NM50G-TF1-T	TO-220F1	G	D	S	Tube
4NM50L-TF2-T	4NM50G-TF2-T	TO-220F2	G	D	S	Tube
4NM50L-TF3-T	4NM50G-TF3-T	TO-220F	G	D	S	Tube
4NM50L-TM3-T	4NM50G-TM3-T	TO-251	G	D	S	Tube
4NM50L-TN3-R	4NM50G-TN3-R	TO-252	G	D	S	Tape Reel
4NM50L-T92-B	4NM50G-T92-B	TO-92	G	D	S	Tape Box
4NM50L-T92-K	4NM50G-T92-K	TO-92	G	D	S	Bulk

Note: Pin Assignment: G: Gate D: Drain S: Source

(1) T: Tube, R: Tape Reel
(2) AA2: SOT-223-2, AA3: SOT-223, TA3: TO-220, TF1: TO-220F1, TF2: TO-220F2, TF3: TO-220F, TM3: TO-251, TN3: TO-252, T92: TO-92
(3) G: Halogen Free and Lead Free, L: Lead Free

■ MARKING

Package	Marking
SOT-223-2 / SOT-223	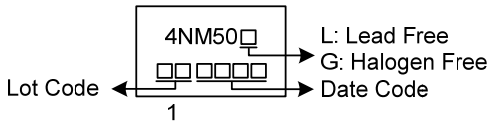
TO-220F / TO-220F / TO-220F1 TO-220F2 /TO-251 / TO-252	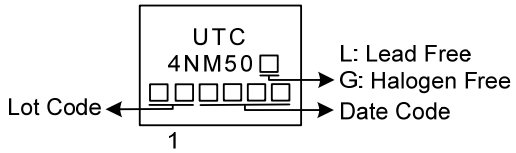
TO-92	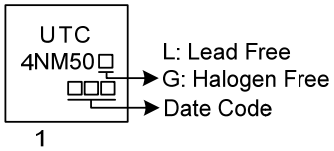

汎翊國際有限公司 www.flying1688.com FLYING

■ ABSOLUTE MAXIMUM RATINGS (T_C = 25°C, unless otherwise specified)

PARAMETER		SYMBOL	RATINGS	UNIT
Drain-Source Voltage		V_{DSS}	500	V
Gate-Source Voltage		V_{GSS}	±30	V
Drain Current	Continuous	I_D	4	A
	Pulsed (Note 2)	I_{DM}	8	A
Avalanche Current (Note 2)		I_{AR}	1.7	A
Avalanche Energy	Single Pulsed (Note 3)	E_{AS}	38	mJ
Peak Diode Recovery dv/dt (Note 4)		dv/dt	3.5	V/ns
Power Dissipation	SOT-223-2/SOT-223	P_D	5	W
	TO-220		85	W
	TO-220F/TO-220F1		28	W
	TO-220F2		30	W
	TO-251/TO-252		52	W
	TO-92		1.78	W
Junction Temperature		T_J	+150	°C
Storage Temperature		T_{STG}	-55 ~ +150	°C

Notes: 1. Absolute maximum ratings are those values beyond which the device could be permanently damaged. Absolute maximum ratings are stress ratings only and functional device operation is not implied.
2. Repetitive Rating : Pulse width limited by maximum junction temperature.
3. L=10mH, I_{AS}=2.76A, V_{DD}=50V, R_G=25 Ω, Starting T_J = 25°C
4. I_{SD}≤4.0A, di/dt≤200A/μs, V_{DD} ≤ BV_{DSS}, Starting T_J = 25°C

■ THERMAL DATA

PARAMETER		SYMBOL	RATING	UNIT
Junction to Ambient	SOT-223-2/SOT-223	θ_{JA}	150	°C/W
	TO-220/TO-220F TO-220F1/TO-220F2		62.5	°C/W
	TO-251/TO-252		110	°C/W
	TO-92		160	°C/W
Junction to Case	SOT-223-2/SOT-223	θ_{JC}	25	°C/W
	TO-220		1.47	°C/W
	TO-220F/TO-220F1		4.46	°C/W
	TO-220F2		4.16	°C/W
	TO-251/TO-252		2.4	°C/W
	TO-92		70	°C/W

汎翊國際有限公司 www.flying1688.com FLYING

■ ELECTRICAL CHARACTERISTICS (T_J =25°C, unless otherwise specified)

PARAMETER		SYMBOL	TEST CONDITIONS	MIN	TYP	MAX	UNIT
OFF CHARACTERISTICS							
Drain-Source Breakdown Voltage		BV_{DSS}	V_{GS} = 0V, I_D = 250μA	500			V
Drain-Source Leakage Current		I_{DSS}	V_{DS} = 500V, V_{GS} = 0V			10	μA
Gate- Source Leakage Current	Forward	I_{GSS}	V_{GS} = 30V, V_{DS} = 0V			100	nA
	Reverse		V_{GS} = -30V, V_{DS} = 0V			-100	nA
ON CHARACTERISTICS							
Gate Threshold Voltage		$V_{GS(TH)}$	V_{DS} = V_{GS}, I_D = 250μA	2.5		4.5	V
Static Drain-Source On-State Resistance		$R_{DS(ON)}$	V_{GS} = 10V, I_D = 2.0A			1.3	Ω
DYNAMIC CHARACTERISTICS							
Input Capacitance		C_{ISS}	V_{GS}=0V, V_{DS}=25V, f=1.0 MHz		215		pF
Output Capacitance		C_{OSS}			205		pF
Reverse Transfer Capacitance		C_{RSS}			27		pF
SWITCHING CHARACTERISTICS							
Total Gate Charge (Note 1)		Q_G	V_{DS}=400V, V_{GS}=10V, I_D=4A, I_G=100μA(Note1,2)		26		nC
Gate to Source Charge		Q_{GS}			2.5		nC
Gate to Drain Charge		Q_{GD}			3.4		nC
Turn-ON Delay Time (Note 1)		$t_{D(ON)}$	V_{DD}=100V, V_{GS}=10V, I_D=4A, R_G=25Ω(Note1,2)		4		ns
Rise Time		t_R			18		ns
Turn-OFF Delay Time		$t_{D(OFF)}$			30		ns
Fall-Time		t_F			26		ns
SOURCE- DRAIN DIODE RATINGS AND CHARACTERISTICS							
Maximum Body-Diode Continuous Current		I_S				4	A
Maximum Body-Diode Pulsed Current		I_{SM}				8	A
Drain-Source Diode Forward Voltage (Note 1)		V_{SD}	I_S=4.0A, V_{GS}=0V			1.4	V
Body Diode Reverse Recovery Time (Note 1)		t_{rr}	I_S=4.0A, V_{GS}=0V, dI_F/dt=100A/μs		210		ns
Body Diode Reverse Recovery Charge		Q_{rr}			1.52		μC

Notes: 1. Pulse Test: Pulse width ≤ 300μs, Duty cycle≤2%.
2. Essentially independent of operating temperature.

汎翊國際有限公司 www.flying1688.com FLYING

■ TEST CIRCUITS AND WAVEFORMS

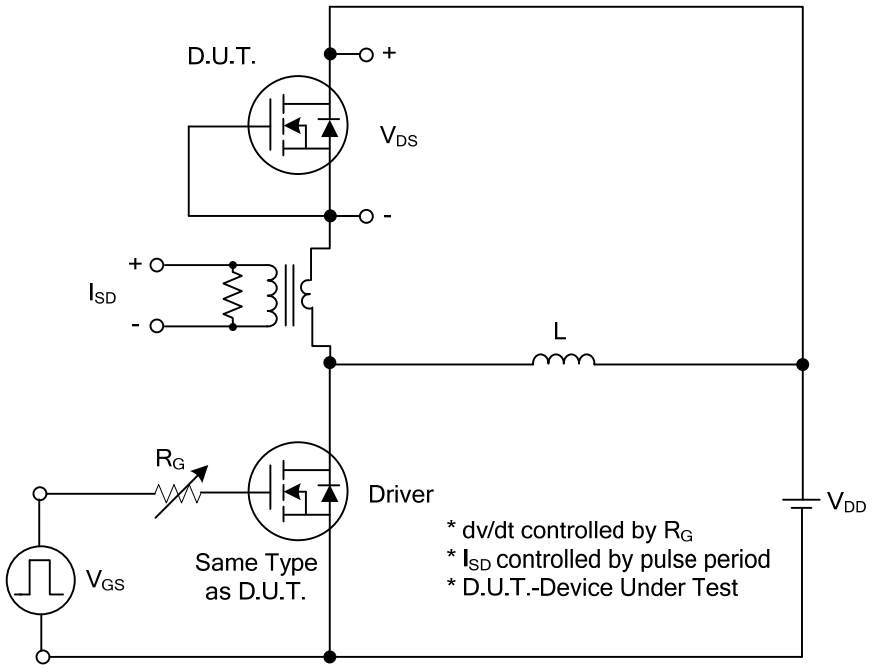

Peak Diode Recovery dv/dt Test Circuit

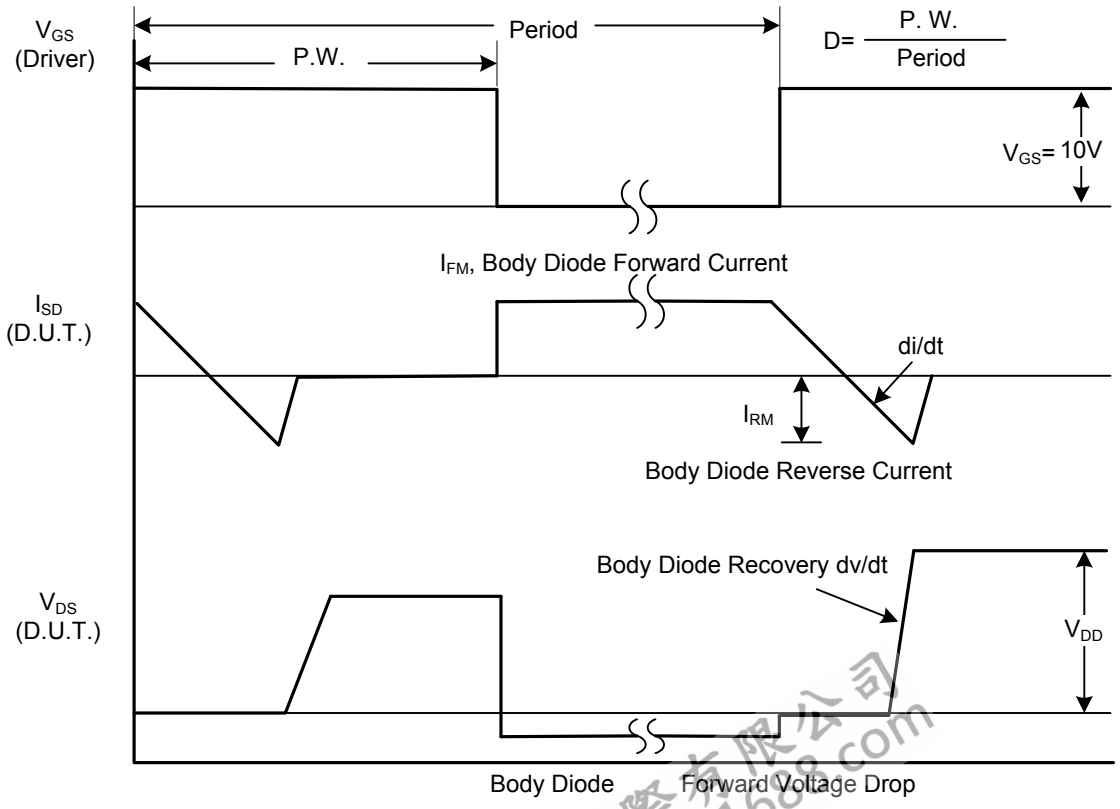

Peak Diode Recovery dv/dt Waveforms

汎翔國際有限公司 www.flying1688.com FLYING

■ TEST CIRCUITS AND WAVEFORMS (Cont.)

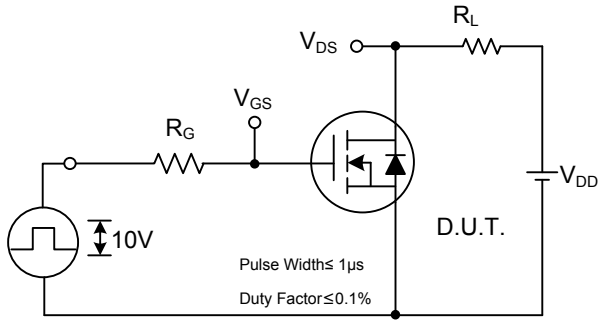

Switching Test Circuit

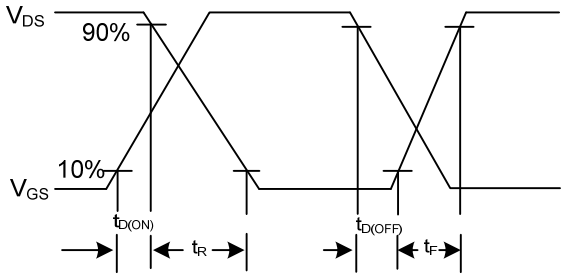

Switching Waveforms

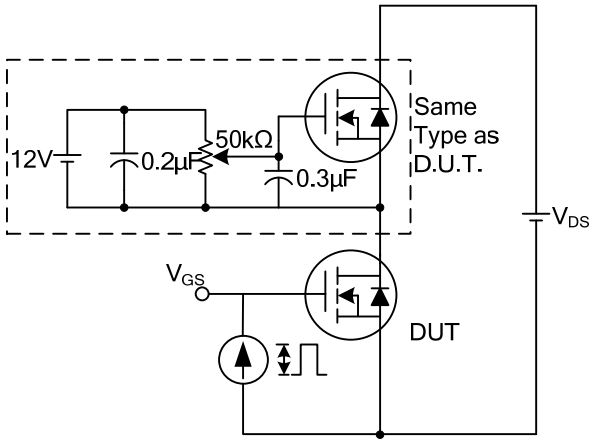

Gate Charge Test Circuit

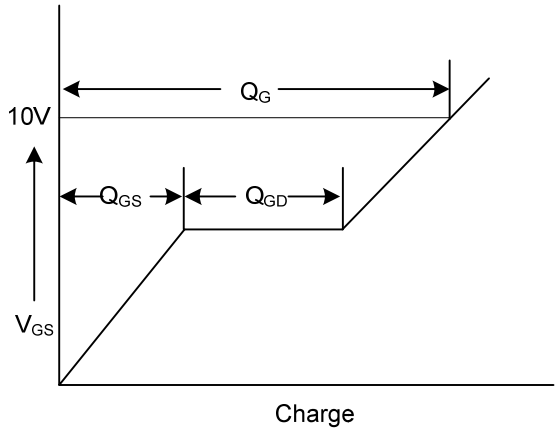

Gate Charge Waveform

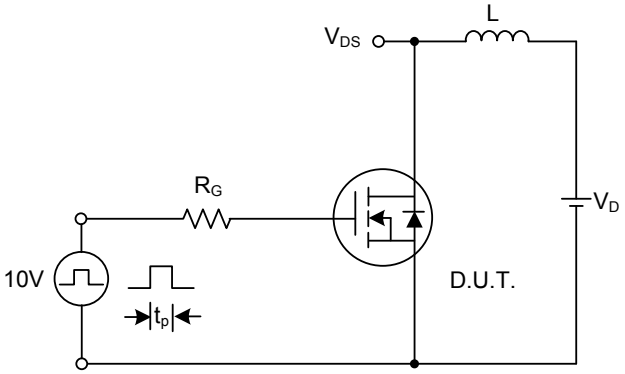

Unclamped Inductive Switching Test Circuit

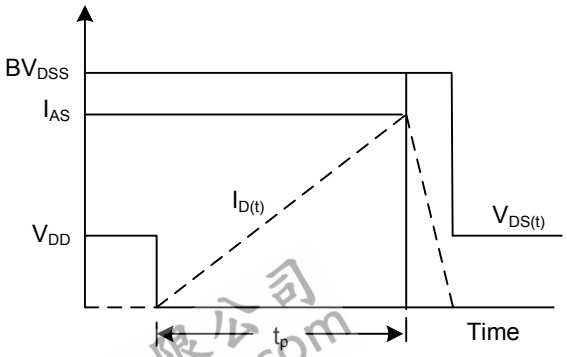

Unclamped Inductive Switching Waveforms

汎翊國際有限公司 www.flying1688.com FLYING

■ TYPICAL CHARACTERISTICS

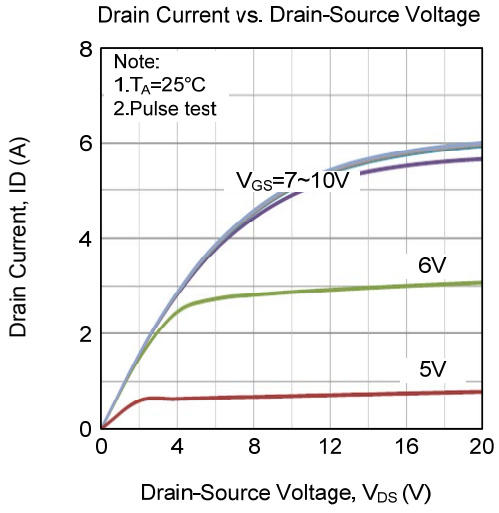

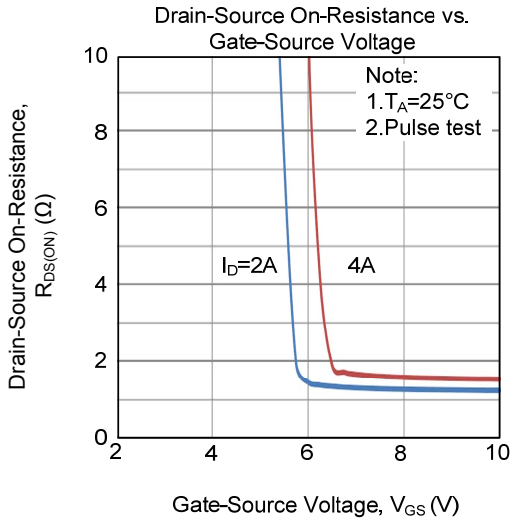

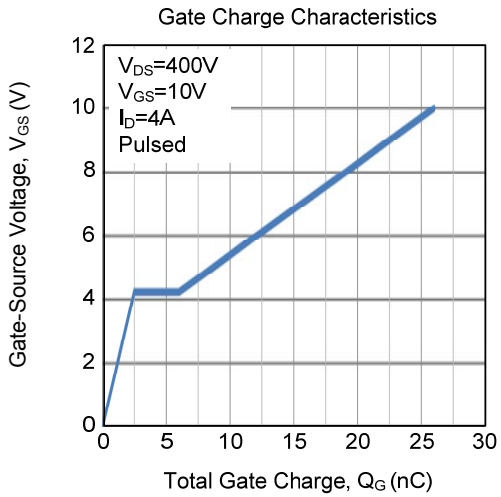

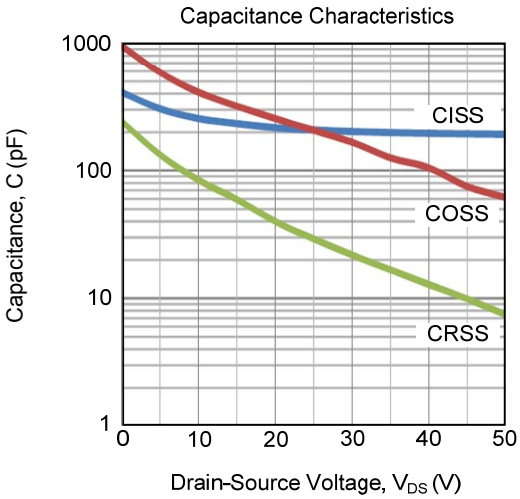

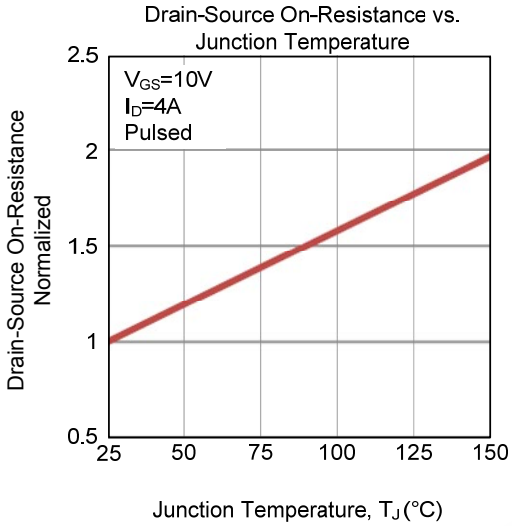

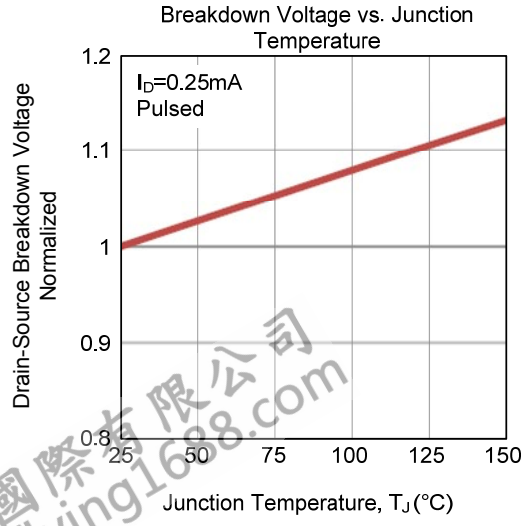

汎翊國際有限公司
www.flying1688.com
FLYING

■ TYPICAL CHARACTERISTICS (Cont.)

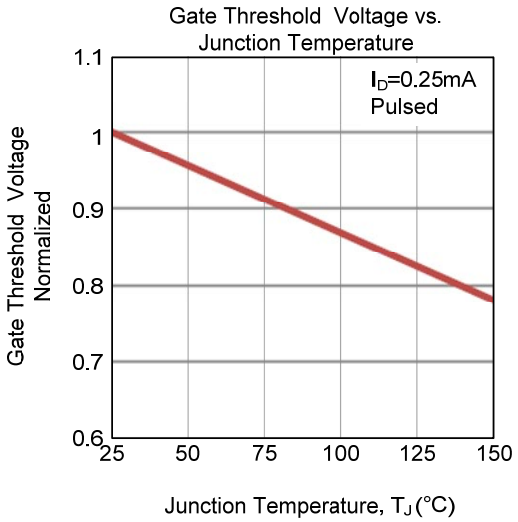

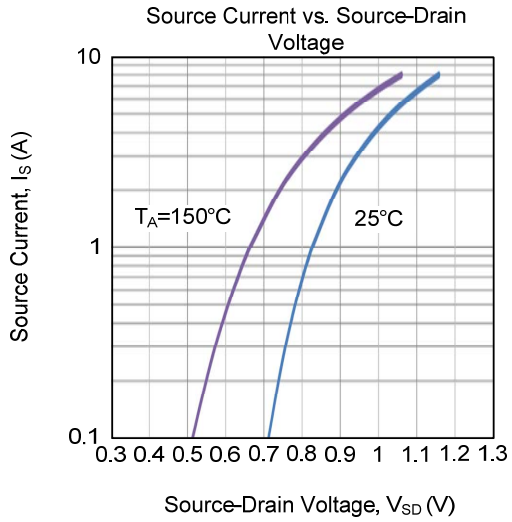

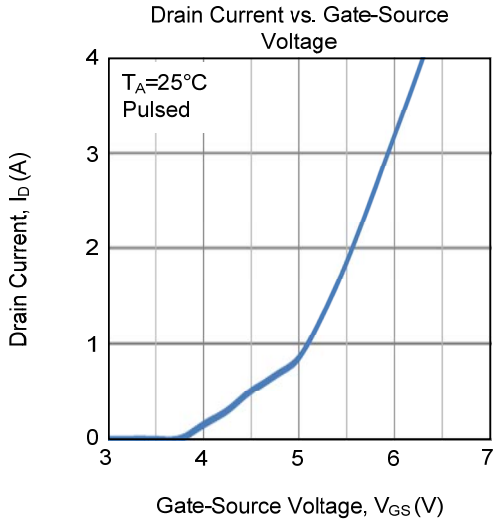

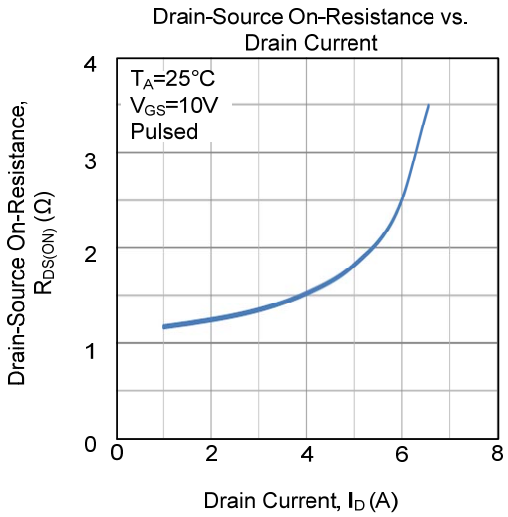

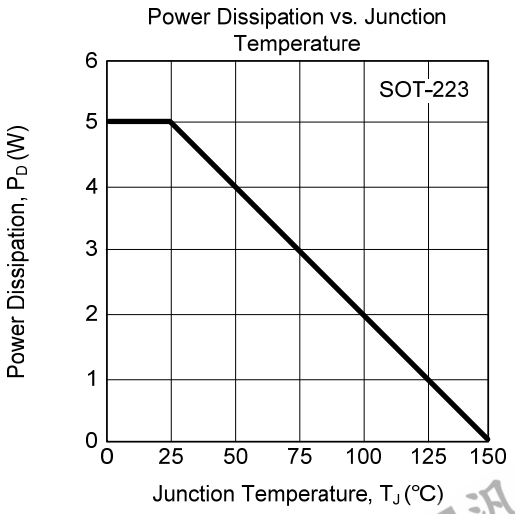

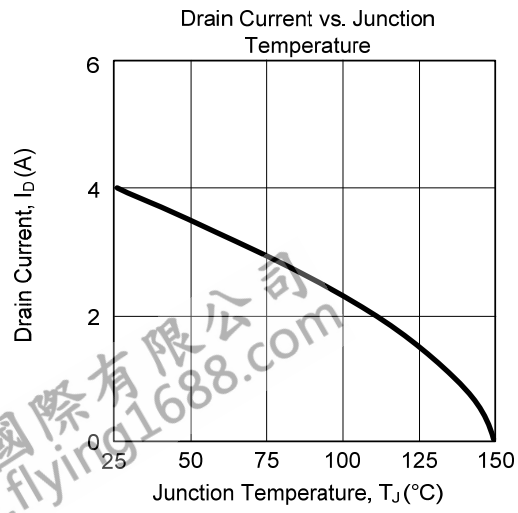

汎翊國際有限公司
www.flying1688.com
FLYING

■ TYPICAL CHARACTERISTICS (Cont.)

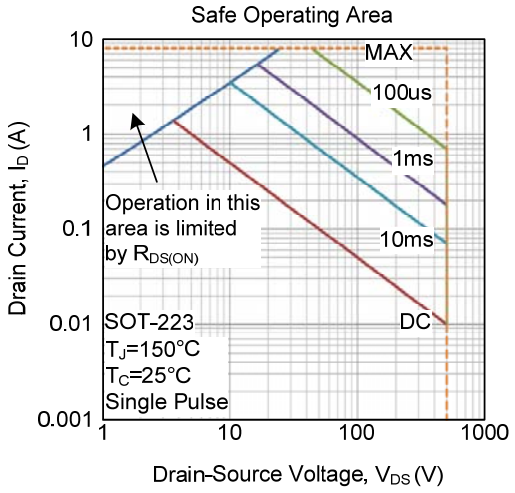

UTC assumes no responsibility for equipment failures that result from using products at values that exceed, even momentarily, rated values (such as maximum ratings, operating condition ranges, or other parameters) listed in products specifications of any and all UTC products described or contained herein. UTC products are not designed for use in life support appliances, devices or systems where malfunction of these products can be reasonably expected to result in personal injury. Reproduction in whole or in part is prohibited without the prior written consent of the copyright owner. UTC reserves the right to make changes to information published in this document, including without limitation specifications and product descriptions, at any time and without notice. This document supersedes and replaces all information supplied prior to the publication hereof.