50A, 600V N-CHANNEL SUPER-JUNCTION MOSFET

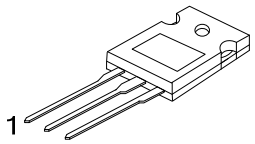

TO-247

■ DESCRIPTION

The **UTC 50NM60** is a Super Junction MOSFET Structure and is designed to have better characteristics, such as fast switching time, low gate charge, low on-state resistance and a high rugged avalanche characteristics. This power MOSFET is usually used at DC-DC, AC-DC converters for power applications.

■ FEATURES

* $R_{DS(ON)}$ < 85mΩ @ V_{GS}=10V, I_D=25A
* High Switching Speed
* 100% Avalanche Tested

■ SYMBOL

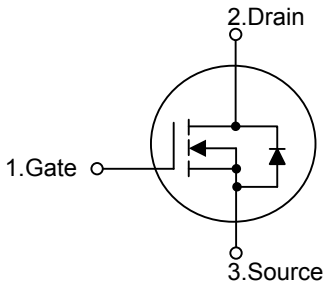

■ ORDERING INFORMATION

Ordering Number		Package	Pin Assignment			Packing
Lead Free	Halogen Free		1	2	3	
50NM60L-T47-T	50NM60G-T47-T	TO-247	G	D	S	Tube

Note: Pin Assignment: G: Gate D: Drain S: Source

50NM60G-T47-T (1)Packing Type (2)Package Type (3)Green Package	(1) T: Tube (2) T47: TO-247 (3) G: Halogen Free and Lead Free, L: Lead Free

■ MARKING

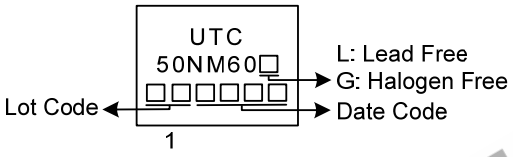

■ ABSOLUTE MAXIMUM RATINGS (T_C=25°C, unless otherwise specified)

PARAMETER		SYMBOL	RATINGS	UNIT
Drain-Source Voltage		V_{DSS}	600	V
Gate-Source Voltage		V_{GSS}	±30	V
Drain Current	Continuous	I_D	50	A
	Pulsed (Note 2)	I_{DM}	200	A
Avalanche Current (Note 2)		I_{AR}	10	A
Avalanche Energy	Single Pulsed (Note 3)	E_{AS}	1800	mJ
Peak Diode Recovery dv/dt (Note 4)		dv/dt	50	V/ns
Power Dissipation		P_D	310	W
Junction Temperature		T_J	+150	°C
Storage Temperature		T_{STG}	-55 ~ +150	°C

Notes: 1. Absolute maximum ratings are those values beyond which the device could be permanently damaged. Absolute maximum ratings are stress ratings only and functional device operation is not implied.
2. Repetitive Rating: Pulse width limited by maximum junction temperature.
3. L = 36mH, I_{AS} = 10A, V_{DD} = 50V, R_G = 25Ω, Starting T_J = 25°C
4. I_{SD}≤30A, di/dt≤200A/μs, V_{DD} ≤ BV_{DSS}, Starting T_J = 25°C

■ THERMAL DATA

PARAMETER	SYMBOL	RATINGS	UNIT
Junction to Ambient	θ_{JA}	40	°C/W
Junction to Case	θ_{jC}	0.4	°C/W

■ ELECTRICAL CHARACTERISTICS (T_C=25°C, unless otherwise specified)

PARAMETER		SYMBOL	TEST CONDITIONS	MIN	TYP	MAX	UNIT
OFF CHARACTERISTICS							
Drain-Source Breakdown Voltage		BV_{DSS}	I_D=250μA, V_{GS}=0V	600			V
Drain-Source Leakage Current		I_{DSS}	V_{DS}=600V, V_{GS}=0V			50	μA
Gate- Source Leakage Current	Forward	I_{GSS}	V_{GS}=+30V, V_{DS}=0V			+100	nA
	Reverse		V_{GS}=-30V, V_{DS}=0V			-100	nA
ON CHARACTERISTICS							
Gate Threshold Voltage		$V_{GS(TH)}$	V_{DS}=V_{GS}, I_D=250μA	2.5		4.5	V
Static Drain-Source On-State Resistance		$R_{DS(ON)}$	V_{GS}=10V, I_D=25A			85	mΩ
DYNAMIC PARAMETERS							
Input Capacitance		C_{ISS}	V_{GS}=0V, V_{DS}=25V, f=1.0MHz		3900		pF
Output Capacitance		C_{OSS}			2850		pF
Reverse Transfer Capacitance		C_{RSS}			220		pF
SWITCHING PARAMETERS							
Total Gate Charge		Q_G	V_{DS}=300V, V_{GS}=10V, I_D=50A, I_G=1mA (Note 1, 2)		100		nC
Gate to Source Charge		Q_{GS}			26		nC
Gate to Drain Charge		Q_{GD}			11		nC
Turn-ON Delay Time		$t_{D(ON)}$	V_{DD}=30V, V_{GS}=10V, I_D=0.5A, R_G=25Ω (Note 1, 2)		140		ns
Rise Time		t_R			430		ns
Turn-OFF Delay Time		$t_{D(OFF)}$			1000		ns
Fall-Time		t_F			640		ns
SOURCE- DRAIN DIODE RATINGS AND CHARACTERISTICS							
Maximum Body-Diode Continuous Current		I_S				50	A
Maximum Body-Diode Pulsed Current		I_{SM}				200	A
Drain-Source Diode Forward Voltage		V_{SD}	I_S=50A, V_{GS}=0V			1.4	V
Body Diode Reverse Recovery Time		t_{rr}	I_S=30A, V_{GS}=0V, V_R=200V		630		ns
Body Diode Reverse Recovery Charge		Q_{rr}	dI_F/dt=100A/μs (Note 1)		13.7		μC

Notes: 1. Pulse Test : Pulse width ≤ 300μs, Duty cycle ≤ 2%.
2. Essentially independent of operating ambient temperature.

■ TEST CIRCUITS AND WAVEFORMS

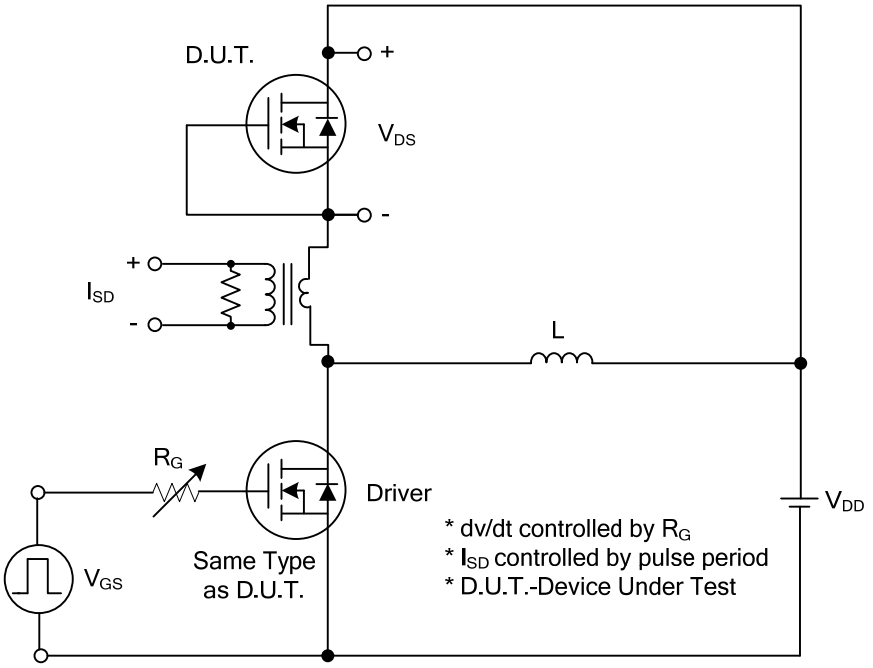

Peak Diode Recovery dv/dt Test Circuit

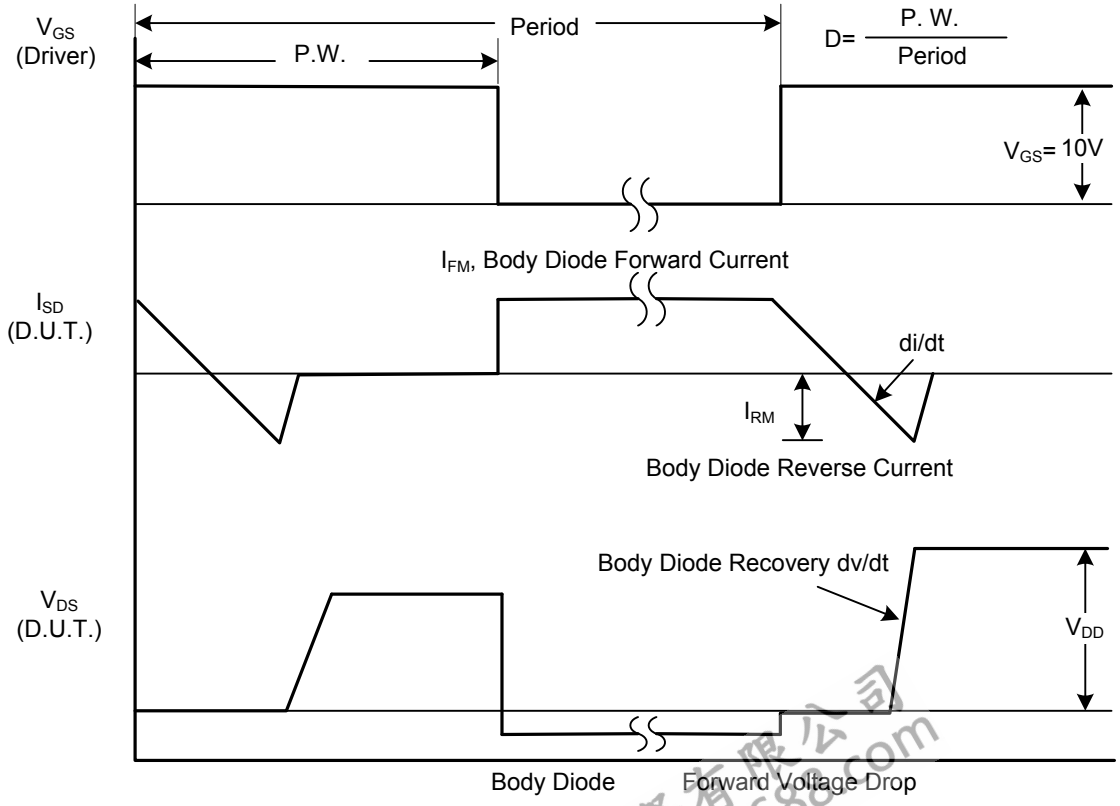

Peak Diode Recovery dv/dt Waveforms

■ TEST CIRCUITS AND WAVEFORMS

Gate Charge Test Circuit

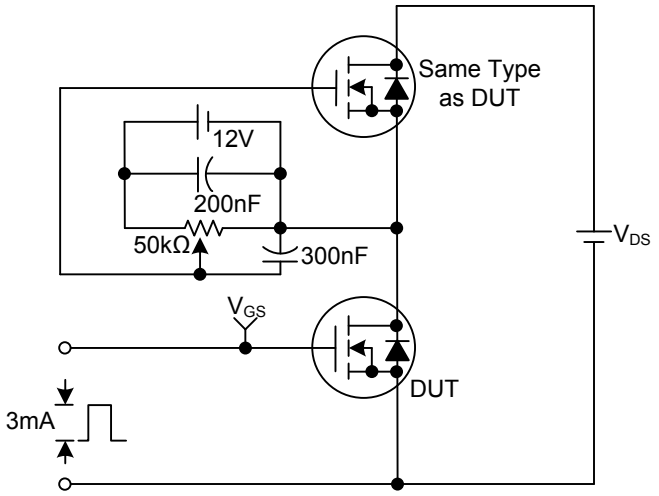

Gate Charge Waveforms

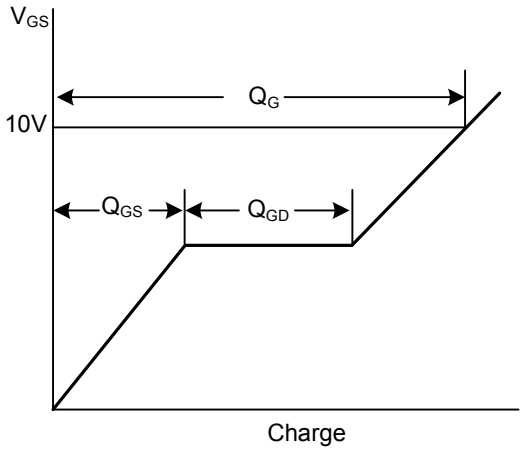

Resistive Switching Test Circuit

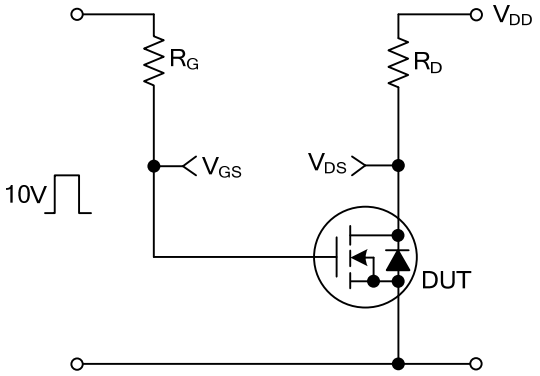

Resistive Switching Waveforms

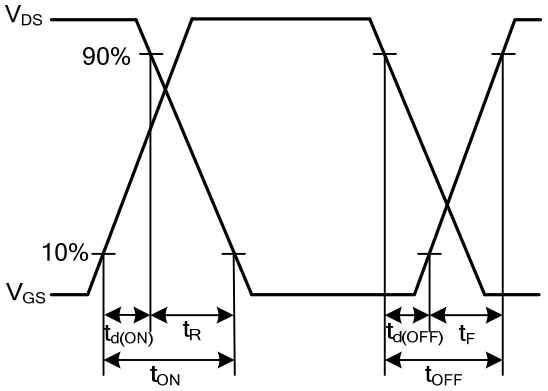

Unclamped Inductive Switching Test Circuit

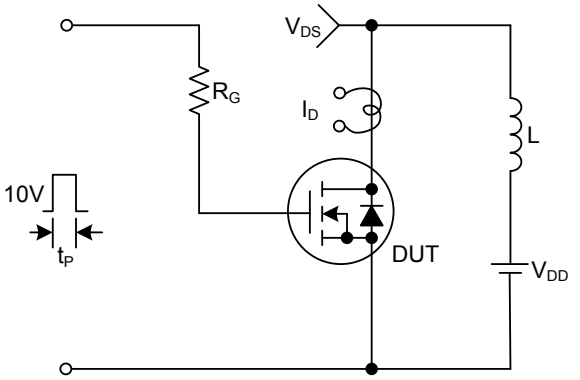

Unclamped Inductive Switching Waveforms

$$E_{AS}=\frac{1}{2}LI_{AS}^{2}\frac{BV_{DSS}}{BV_{DSS}-V_{DD}}$$

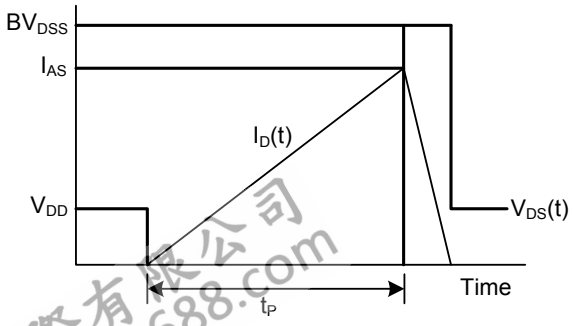

■ TYPICAL CHARACTERISTICS

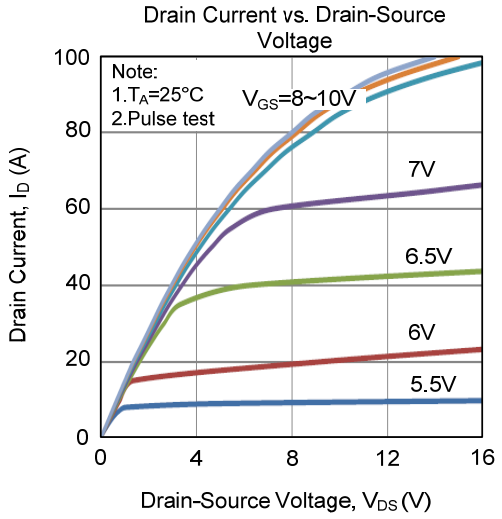

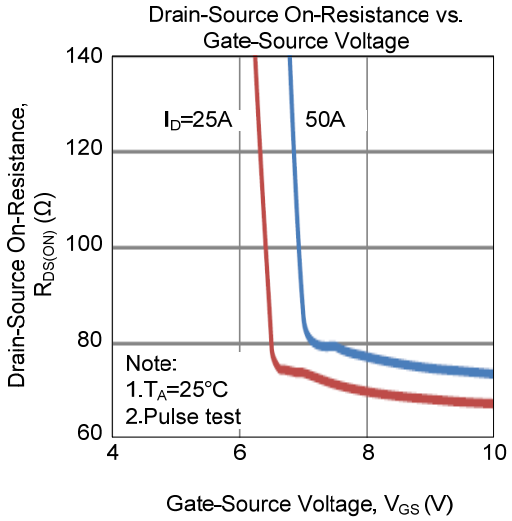

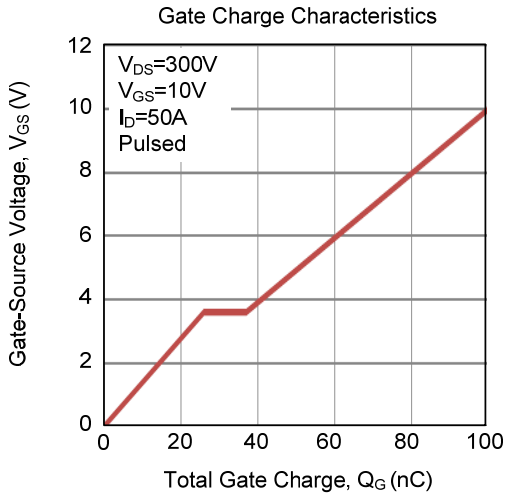

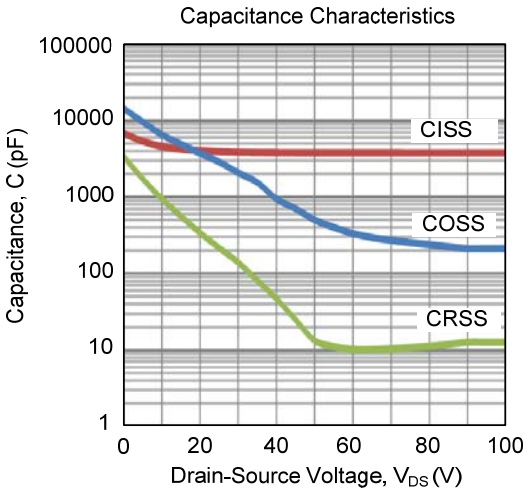

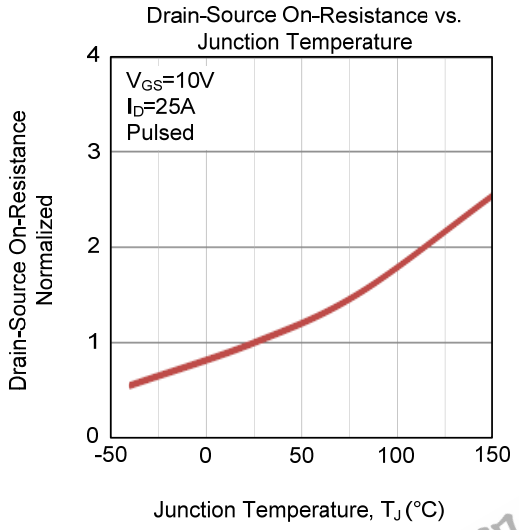

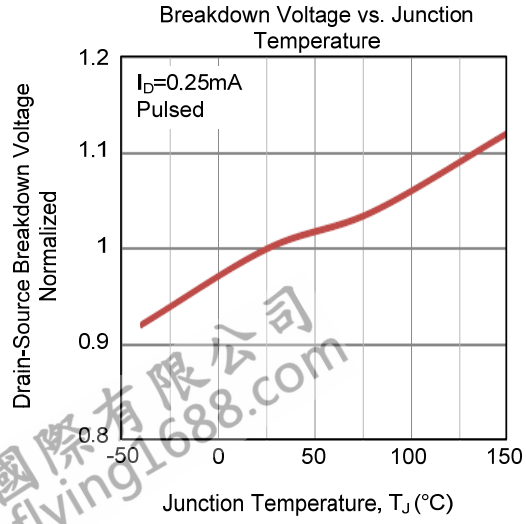

■ TYPICAL CHARACTERISTICS (Cont.)

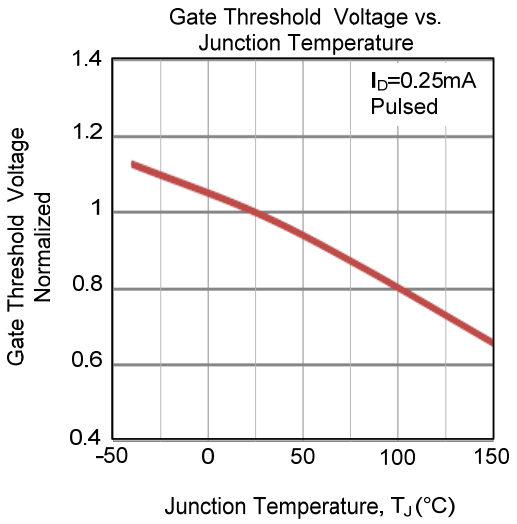

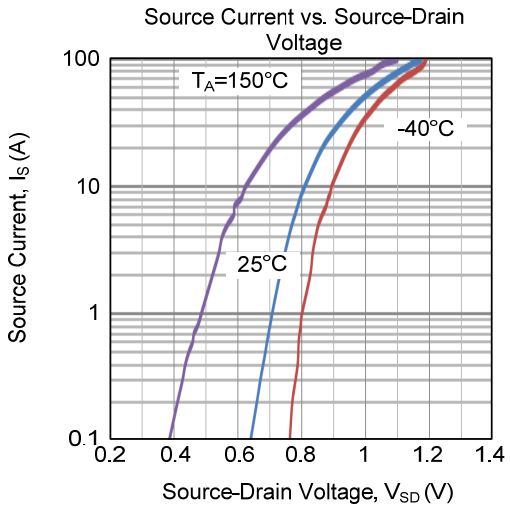

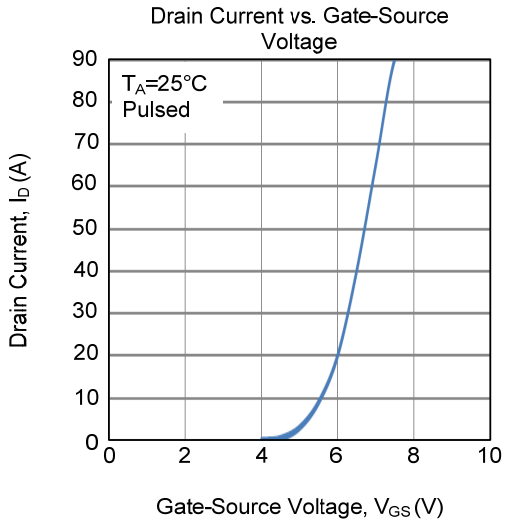

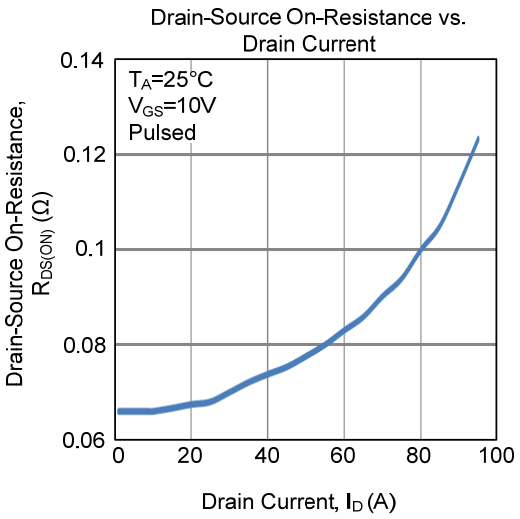

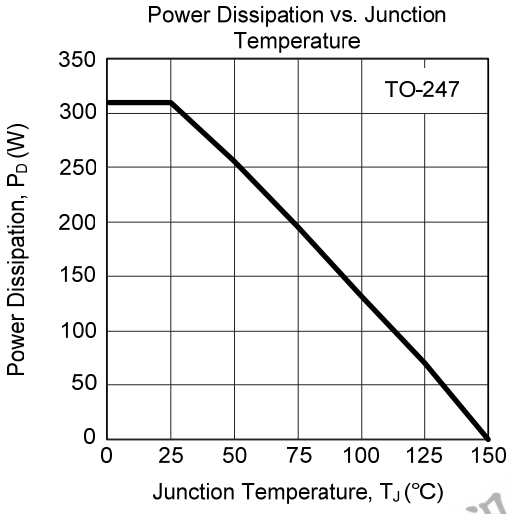

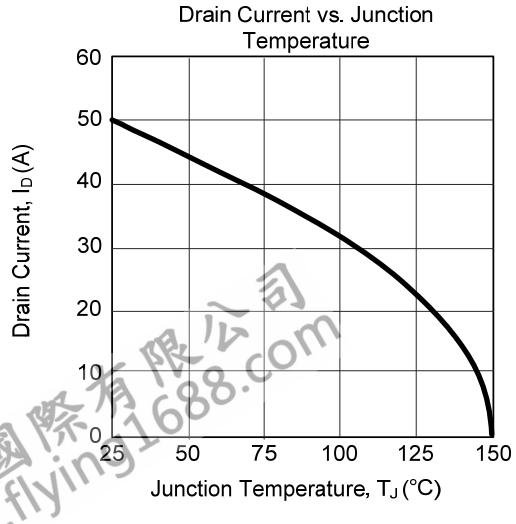

■ TYPICAL CHARACTERISTICS (Cont.)