7A, 600V N-CHANNEL SUPER-JUNCTION MOSFET

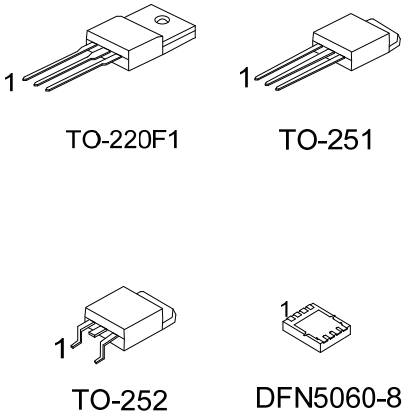

■ DESCRIPTION

The UTC **7NM60** is a high voltage super junction MOSFET and is designed to have better characteristics.

The UTC **7NM60** Utilizing an advanced charge-balance technology, enhance system efficiency, improve EMI and reliability. such as low gate charge, low on-state resistance and have a high power density and high rugged avalanche characteristics. This super junction MOSFET usually used at AC/DC power conversion, and industrial power applications.

■ FEATURES

* $R_{DS(ON)} \leq 0.95\Omega$ @ V_{GS}=10V, I_D=3.7A
* Fast Switching Capability
* Avalanche Energy Tested
* Improved dv/dt Capability, High Ruggedness

■ SYMBOL

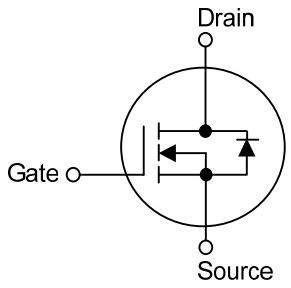

■ ORDERING INFORMATION

Ordering Number		Package	Pin Assignment								Packing
Lead Free	Halogen Free		1	2	3	4	5	6	7	8	
7NM60L-TF1-T	7NM60G-TF1-T	TO-220F1	G	D	S	-	-	-	-	-	Tube
7NM60L-TM3-T	7NM60G-TM3-T	TO-251	G	D	S	-	-	-	-	-	Tube
7NM60L-TN3-R	7NM60G-TN3-R	TO-252	G	D	S	-	-	-	-	-	Tape Reel
7NM60L-K08-5060-R	7NM60G-K08-5060-R	DFN5060-8	S	S	S	G	D	D	D	D	Tape Reel

Note: Pin Assignment: G: Gate D: Drain S: Source

7NM60G-TF1-T
- (1)Packing Type
- (2)Package Type
- (3)Green Package

(1) T: Tube, R: Tape Reel
(2) TF1: TO-220F1, TM3: TO-251, TN3: TO-252
K08-5060: DFN5060-8
(3) G: Halogen Free and Lead Free, L: Lead Free

■ MARKING

TO-220F1 / TO-251 / TO-252	DFN5060-8
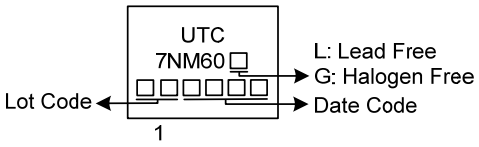	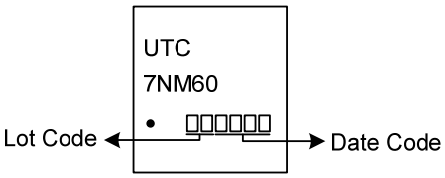

■ ABSOLUTE MAXIMUM RATINGS (T_C = 25°C, unless otherwise specified)

PARAMETER		SYMBOL	RATINGS	UNIT
Drain-Source Voltage		V_{DSS}	600	V
Gate-Source Voltage		V_{GSS}	±30	V
Drain Current	Continuous	I_D	7	A
	Pulsed (Note 2)	I_{DM}	14	A
Avalanche Energy	Single Pulsed (Note 3)	E_{AS}	33.8	mJ
Peak Diode Recovery dv/dt (Note 4)		dv/dt	3.7	V/ns
Power Dissipation	TO-220F1	P_D	26	W
	TO-251/TO-252		52	W
	DFN5060-8		20	W
Junction Temperature		T_J	+150	°C
Storage Temperature		T_{STG}	-55 ~ +150	°C

Notes: 1. Absolute maximum ratings are those values beyond which the device could be permanently damaged. Absolute maximum ratings are stress ratings only and functional device operation is not implied.
2. Repetitive Rating : Pulse width limited by maximum junction temperature.
3. L=10mH, I_{AS}=2.6A, V_{DD}=50V, R_G=25 Ω, Starting T_J = 25°C
4. I_{SD}≤7.0A, di/dt≤200A/μs, V_{DD} ≤ BV_{DSS}, Starting T_J = 25°C

■ THERMAL DATA

PARAMETER		SYMBOL	RATINGS	UNIT
Junction to Ambient	TO-220F1	θ_{JA}	62.5	°C/W
	TO-251/TO-252		110	
	DFN5060-8		75	
Junction to Case	TO-220F1	θ_{JC}	4.8	°C/W
	TO-251/TO-252		2.4 (Note)	
	DFN5060-8		6.25 (Note)	

Note: Device mounted on FR-4 substrate P_C board, 2oz copper, with 1inch square copper plate.

■ ELECTRICAL CHARACTERISTICS (T_C =25°C, unless otherwise specified)

PARAMETER		SYMBOL	TEST CONDITIONS	MIN	TYP	MAX	UNIT
OFF CHARACTERISTICS							
Drain-Source Breakdown Voltage		BV_{DSS}	V_{GS} = 0V, I_D = 250μA	600			V
Drain-Source Leakage Current		I_{DSS}	V_{DS} = 600V, V_{GS} = 0V			10	μA
Gate- Source Leakage Current	Forward	I_{GSS}	V_{GS} = 30V, V_{DS} = 0V			100	nA
	Reverse		V_{GS} = -30V, V_{DS} = 0V			-100	nA
ON CHARACTERISTICS							
Gate Threshold Voltage		$V_{GS(TH)}$	V_{DS} = V_{GS}, I_D = 250μA	2.5		4.5	V
Static Drain-Source On-State Resistance		$R_{DS(ON)}$	V_{GS} = 10V, I_D = 3.7A			0.95	Ω
DYNAMIC CHARACTERISTICS							
Input Capacitance		C_{ISS}	V_{DS}=25V, V_{GS}=0V, f=1.0MHz		424		pF
Output Capacitance		C_{OSS}			348		pF
Reverse Transfer Capacitance		C_{RSS}			35		pF
SWITCHING CHARACTERISTICS							
Total Gate Charge		Q_G	V_{DS}=480V, V_{GS}=10V, I_D=7A I_G=1mA (Note 1, 2)		17		nC
Gate-Source Charge		Q_{GS}			3.6		nC
Gate-Drain Charge		Q_{GD}			5.5		nC
Turn-On Delay Time		$t_{D(ON)}$	V_{DD}=100V, V_{GS}=10V, I_D =7A, R_G =25Ω (Note 1, 2)		5.6		ns
Turn-On Rise Time		t_R			20		ns
Turn-Off Delay Time		$t_{D(OFF)}$			50		ns
Turn-Off Fall Time		t_F			36		ns
DRAIN-SOURCE DIODE CHARACTERISTICS AND MAXIMUM RATINGS							
Maximum Continuous Drain-Source Diode Forward Current		I_S				7	A
Maximum Pulsed Drain-Source Diode Forward Current		I_{SM}				14	A
Drain-Source Diode Forward Voltage		V_{SD}	I_S=7A, V_{GS}=0V			1.4	V
Body Diode Reverse Recovery Time		t_{rr}	I_S=7A, V_{GS}=0V, dI/dt=100A/μs		320		nS
Body Diode Reverse Recovery Charge		Q_{rr}			3.2		nC

Notes: 1. Pulse Test: Pulse width ≤ 300μs, Duty cycle≤2%.
2. Essentially independent of operating temperature.

■ TEST CIRCUITS AND WAVEFORMS

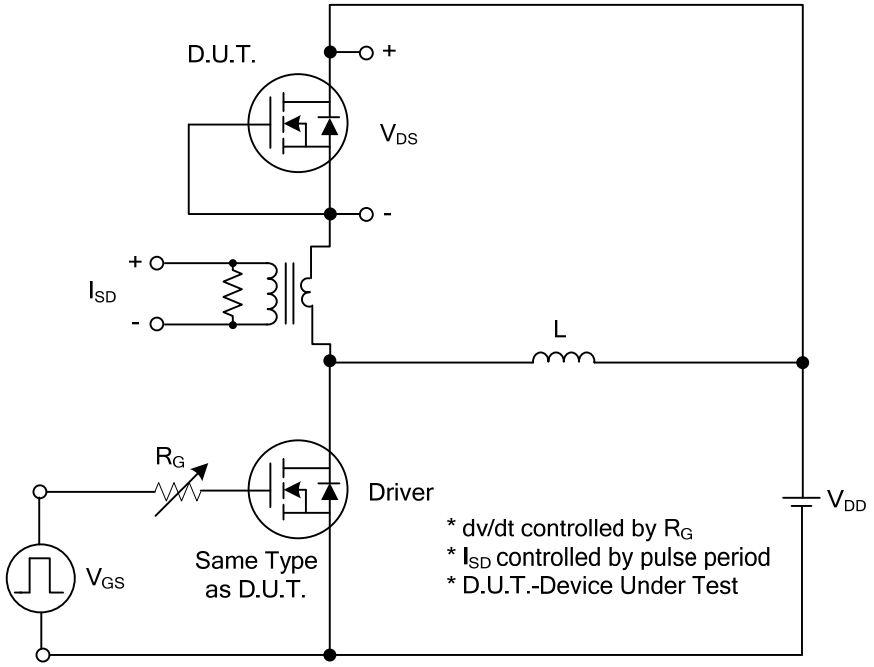

Peak Diode Recovery dv/dt Test Circuit

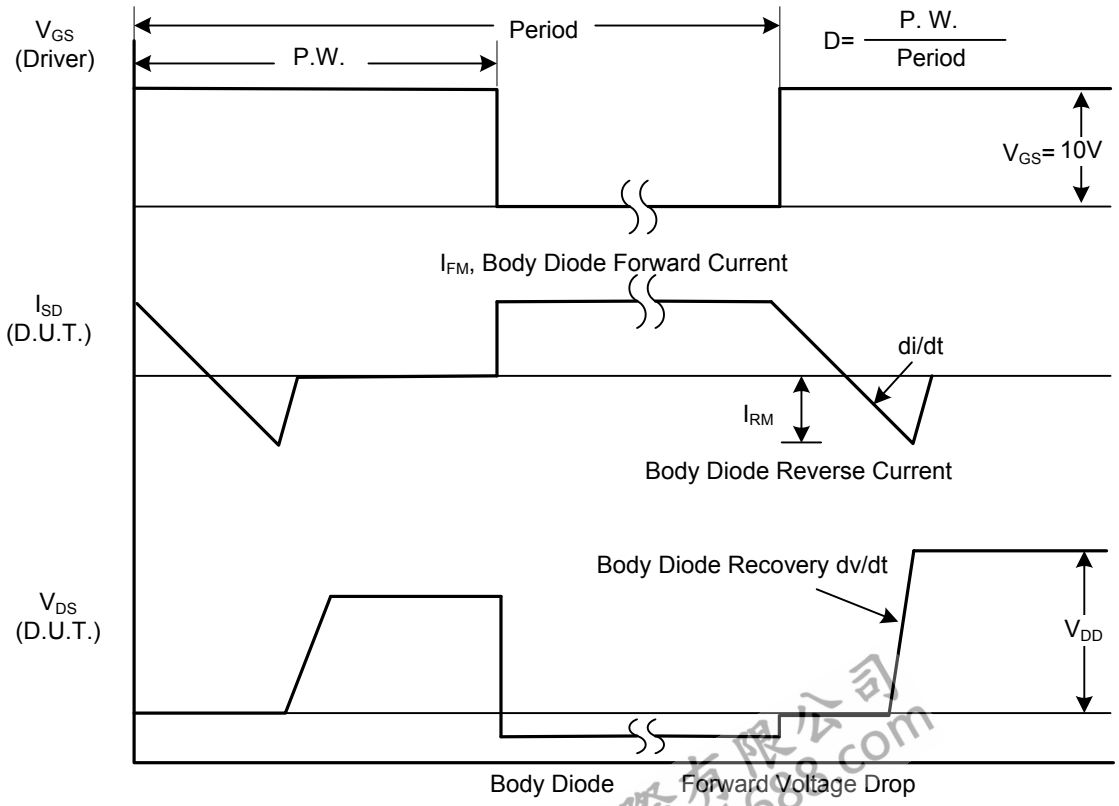

Peak Diode Recovery dv/dt Waveforms

■ TEST CIRCUITS AND WAVEFORMS

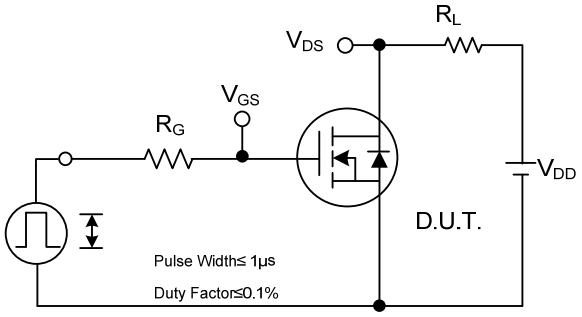

Switching Test Circuit

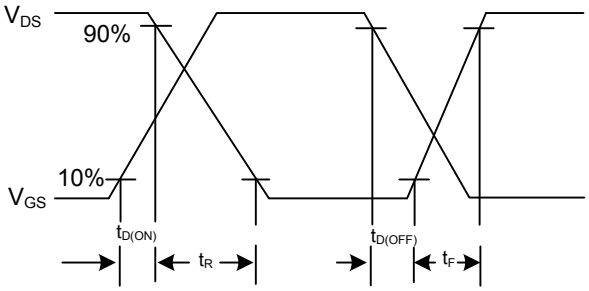

Switching Waveforms

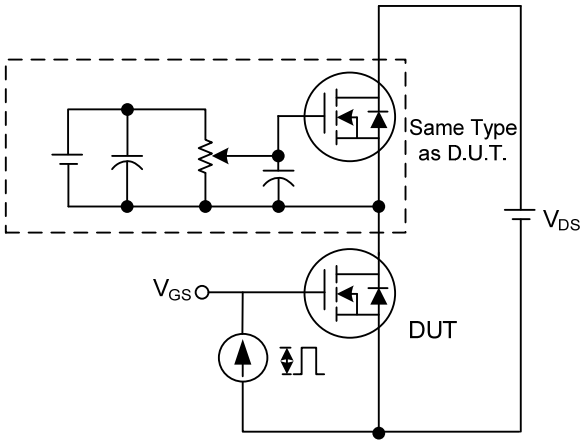

Gate Charge Test Circuit

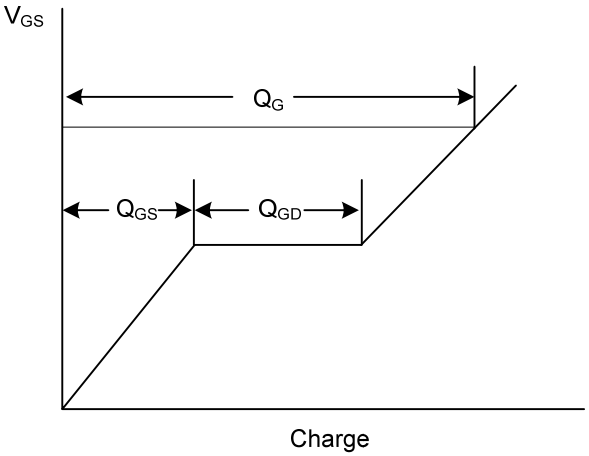

Gate Charge Waveform

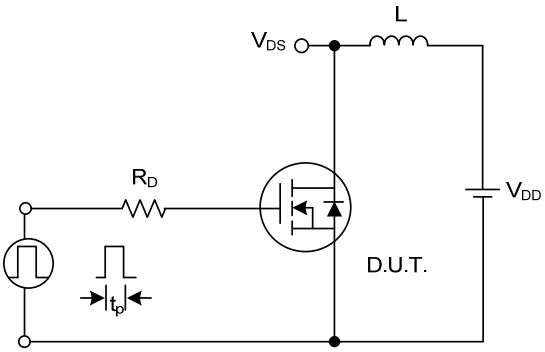

Unclamped Inductive Switching Test Circuit

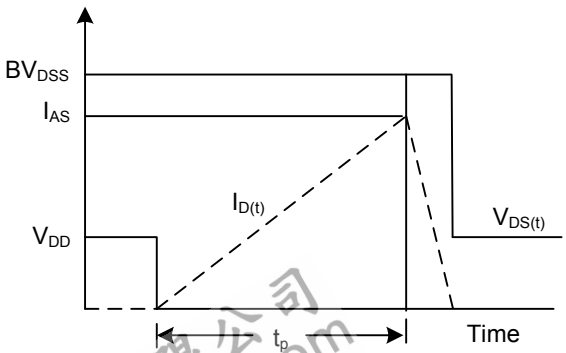

Unclamped Inductive Switching Waveforms

■ TYPICAL CHARACTERISTICS

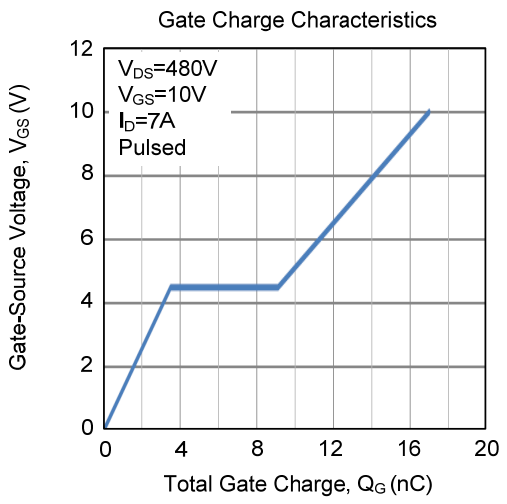

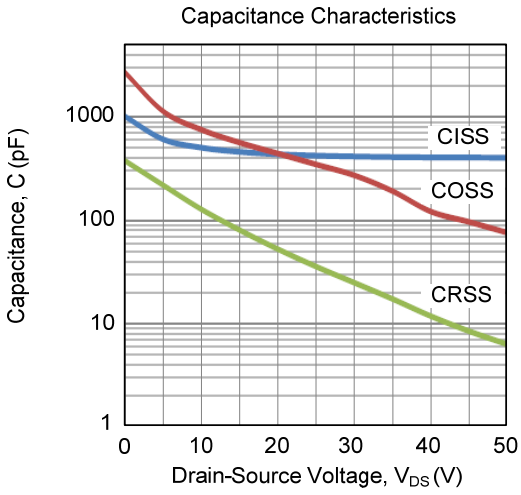

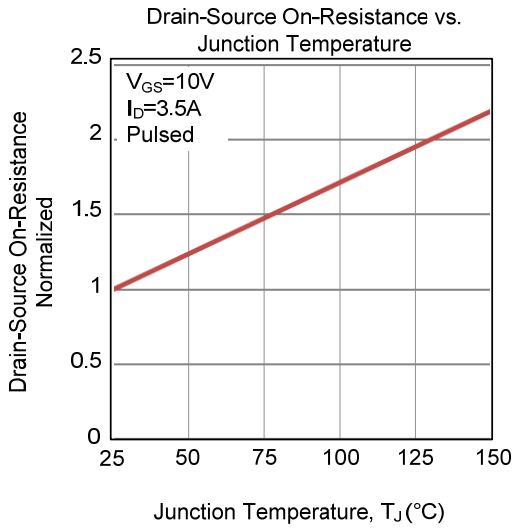

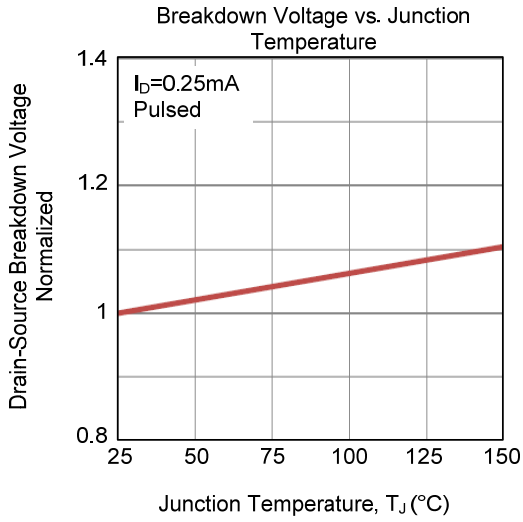

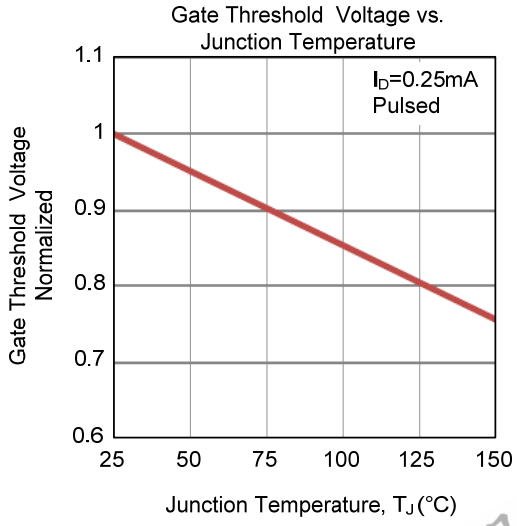

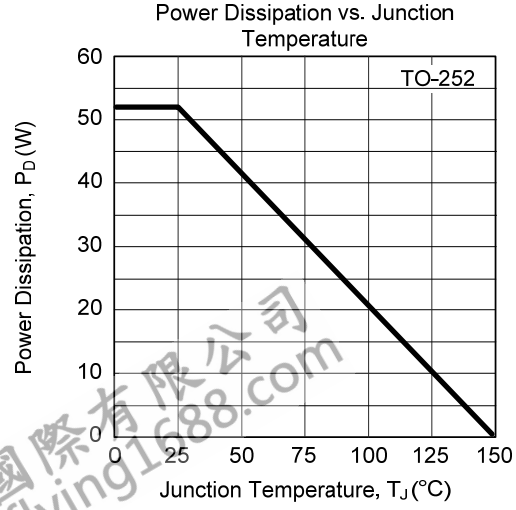

■ TYPICAL CHARACTERISTICS (Cont.)