7A, 650V N-CHANNEL SUPER-JUNCTION MOSFET

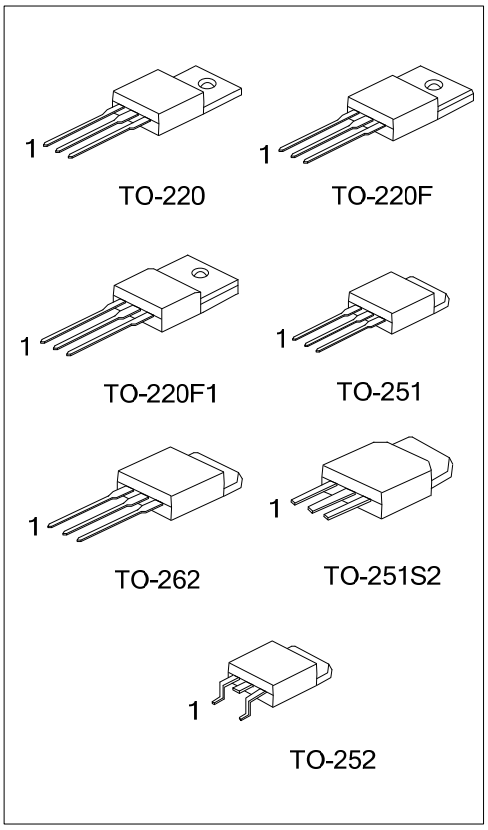

■ DESCRIPTION

The UTC **7NM65** is a Super Junction MOSFET Structure. It uses UTC advanced planar stripe, DMOS technology to provide customers perfect switching performance, minimal on-state resistance.

The UTC **7NM65** is universally applied in electronic lamp ballasts based on half bridge topology, high efficiency switched mode power supplies, active power factor correction, etc.

■ FEATURES

* $R_{DS(ON)} \leq 0.95\Omega$ @ V_{GS}=10V, I_D=3.5A
* Fast switching capability
* Avalanche energy tested
* Improved dv/dt capability, high ruggedness

■ SYMBOL

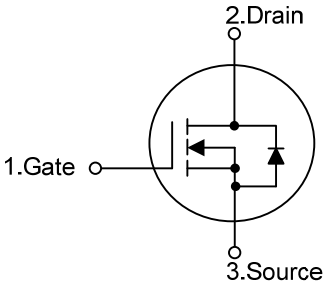

■ ORDERING INFORMATION

Ordering Number		Package	Pin Assignment			Packing
Lead Free	Halogen Free		1	2	3	
7NM65L-TA3-T	7NM65G-TA3-T	TO-220	G	D	S	Tube
7NM65L-TF3-T	7NM65G-TF3-T	TO-220F	G	D	S	Tube
7NM65L-TF1-T	7NM65G-TF1-T	TO-220F1	G	D	S	Tube
7NM65L-TM3-T	7NM65G-TM3-T	TO-251	G	D	S	Tube
7NM65L-TMS2-T	7NM65G-TMS2-T	TO-251S2	G	D	S	Tube
7NM65L-TN3-R	7NM65G-TN3-R	TO-252	G	D	S	Tape Reel
7NM65L-T2Q-T	7NM65G-T2Q-T	TO-262	G	D	S	Tube

Note: Pin Assignment: G: Gate D: Drain S: Source

7NM65G-TA3-T
- (1)Packing Type
- (2)Package Type
- (3)Green Package

(1) T: Tube, R: Tape Reel
(2) TA3: TO-220, TF1: TO-220F1, TF3: TO-220F
TM3: TO-251, TMS2: TO-251S2, TN3: TO-252
TQ2: TO-262
(3) G: Halogen Free and Lead Free, L: Lead Free

■ MARKING

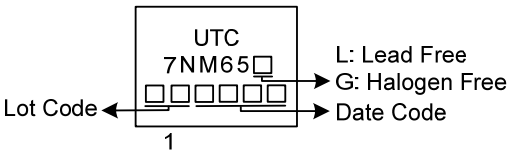

■ ABSOLUTE MAXIMUM RATINGS (T_C = 25°C, unless otherwise specified)

PARAMETER		SYMBOL	RATINGS	UNIT
Drain-Source Voltage		V_{DSS}	650	V
Gate-Source Voltage		V_{GSS}	±30	V
Drain Current	Continuous	I_D	7	A
	Pulsed (Note 2)	I_{DM}	14	A
Avalanche Current (Note 2)		I_{AR}	1.7	A
Avalanche Energy	Single Pulsed (Note 3)	E_{AS}	208	mJ
Peak Diode Recovery dv/dt (Note 4)		dv/dt	4.0	V/ns
Power Dissipation	TO-220/TO-262	P_D	142	W
	TO-220F/TO-220F1		48	W
	TO-251/ TO-251S2 TO-252		60	W
Junction Temperature		T_J	+150	°C
Storage Temperature		T_{STG}	-55 ~ +150	°C

Notes: 1. Absolute maximum ratings are those values beyond which the device could be permanently damaged. Absolute maximum ratings are stress ratings only and functional device operation is not implied.
2. Repetitive Rating : Pulse width limited by maximum junction temperature.
3. L = 144 mH, I_{AS} = 1.7A, V_{DD} = 50V, R_G = 25 Ω, Starting T_J = 25°C
4. I_{SD}≤7.0A, di/dt≤200A/μs, V_{DD}≤BV_{DSS}, Starting T_J = 25°C

■ THERMAL CHARACTERISTICS

PARAMETER		SYMBOL	RATINGS	UNIT
Junction to Ambient	TO-220/TO-220F TO-220F1/TO-262	θ_{JA}	62.5	°C/W
	TO-251/ TO-251S2 TO-252		110	
Junction to Case	TO-220/TO-262	θ_{JC}	0.88	°C/W
	TO-220F/TO-220F1		2.6	
	TO-251/ TO-251S2 TO-252		2.08	

■ ELECTRICAL CHARACTERISTICS (T_J=25°C, unless otherwise specified)

PARAMETER		SYMBOL	TEST CONDITIONS	MIN	TYP	MAX	UNIT
OFF CHARACTERISTICS							
Drain-Source Breakdown Voltage		BV_{DSS}	V_{GS} = 0V, I_D = 250μA	650			V
Drain-Source Leakage Current		I_{DSS}	V_{DS} = 650V, V_{GS} = 0V			10	μA
Gate- Source Leakage Current	Forward	I_{GSS}	V_{GS} = 30V, V_{DS} = 0V			100	nA
	Reverse		V_{GS} = -30V, V_{DS} = 0V			-100	nA
ON CHARACTERISTICS							
Gate Threshold Voltage		$V_{GS(TH)}$	V_{DS} = V_{GS}, I_D = 250μA	2.5		4.5	V
Static Drain-Source On-State Resistance		$R_{DS(ON)}$	V_{GS} = 10V, I_D = 3.5A			0.95	Ω
DYNAMIC CHARACTERISTICS							
Input Capacitance		C_{ISS}	V_{GS}=0V, V_{DS}=25V, f=1.0 MHz		430		pF
Output Capacitance		C_{OSS}			250		pF
Reverse Transfer Capacitance		C_{RSS}			22		pF
SWITCHING CHARACTERISTICS							
Total Gate Charge (Note 1)		Q_G	V_{DS}=520V, V_{GS}=10V, I_D=7A I_G=1mA		22		nC
Gate-Source Charge		Q_{GS}			3.6		nC
Gate-Drain Charge		Q_{GD}			7.6		nC
Turn-On Delay Time (Note 1)		$t_{D(ON)}$	V_{DD}=100V, V_{GS}=10V, I_D=7A, R_G=10Ω (Note 1, 2)		5		ns
Turn-On Rise Time		t_R			15		ns
Turn-Off Delay Time		$t_{D(OFF)}$			35		ns
Turn-Off Fall Time		t_F			19		ns
DRAIN-SOURCE DIODE CHARACTERISTICS AND MAXIMUM RATINGS							
Maximum Continuous Drain-Source Diode Forward Current		I_S				7	A
Maximum Pulsed Drain-Source Diode Forward Current		I_{SM}				14	A
Drain-Source Diode Forward Voltage (Note 1)		V_{SD}	V_{GS}=0V, I_S=7.0A			1.4	V
Body Diode Reverse Recovery Time (Note 1)		t_{rr}	V_{GS}=0V, I_S=7.0A, dI_F/dt=100A/μs		300		nS
Body Diode Reverse Recovery Charge		Q_{rr}			3		μC

Notes: 1. Pulse Test: Pulse width≤300μs, Duty cycle≤2%
2. Essentially independent of operating temperature

■ TEST CIRCUITS AND WAVEFORMS

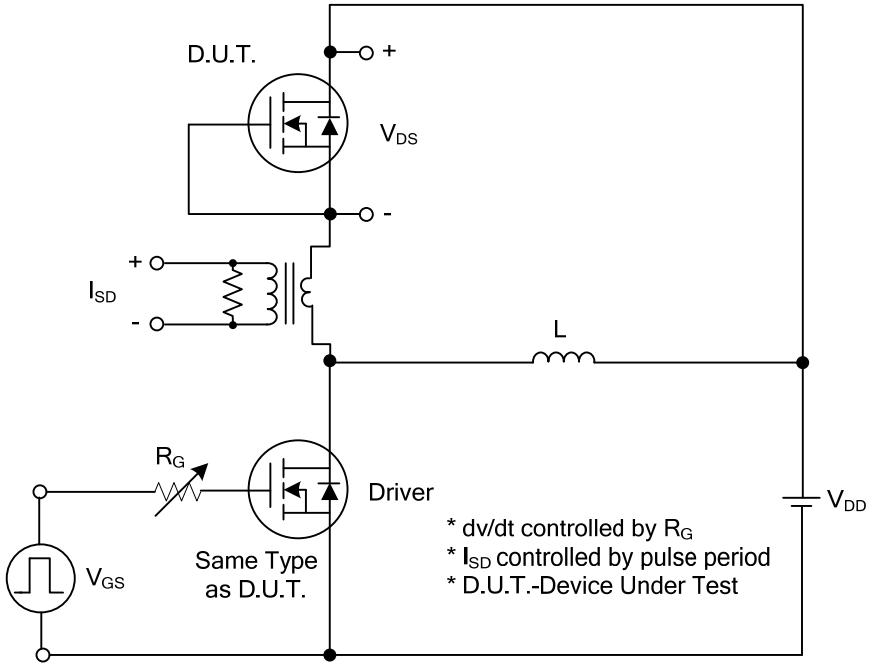

Peak Diode Recovery dv/dt Test Circuit

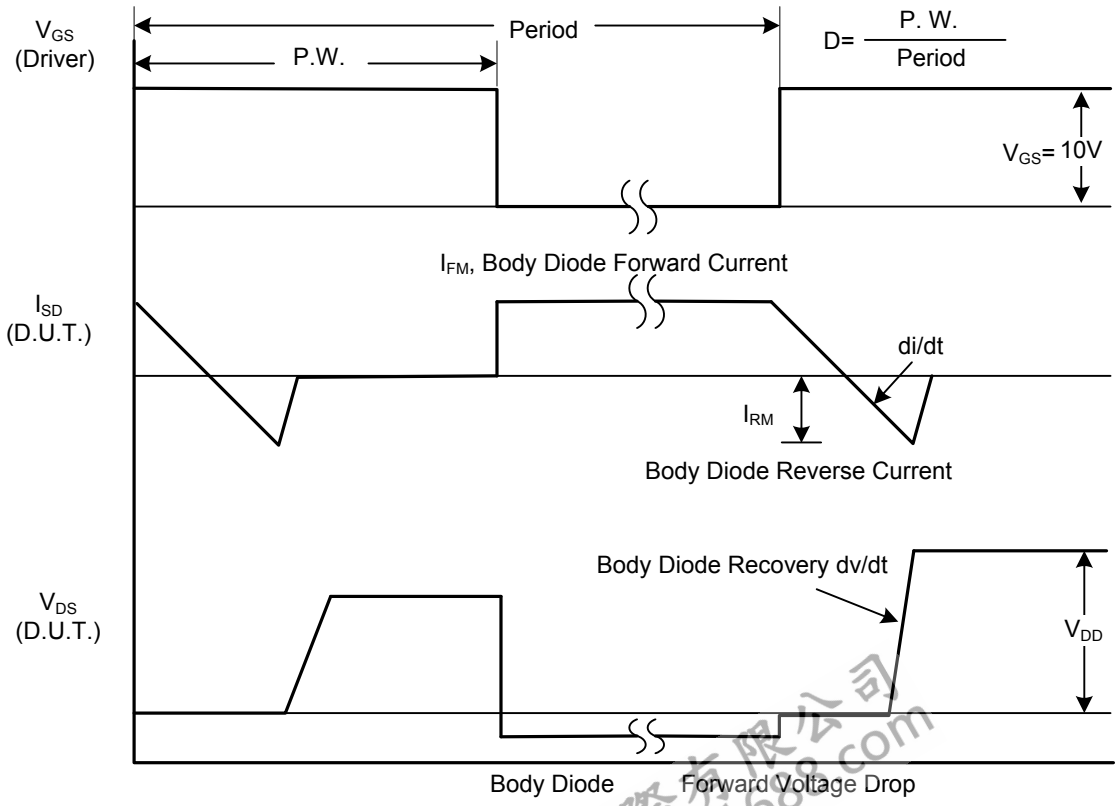

Peak Diode Recovery dv/dt Waveforms

■ TEST CIRCUITS AND WAVEFORMS (Cont.)

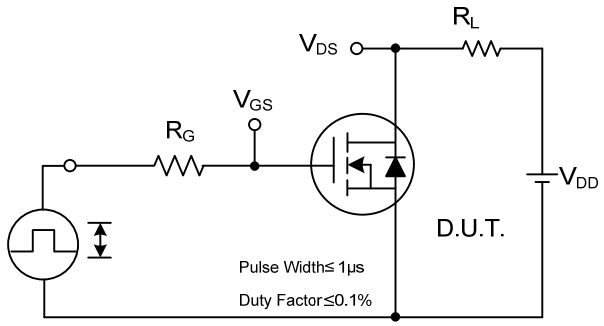

Switching Test Circuit

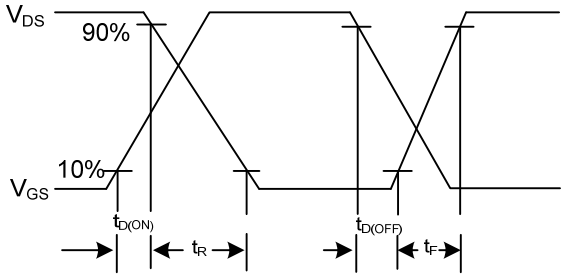

Switching Waveforms

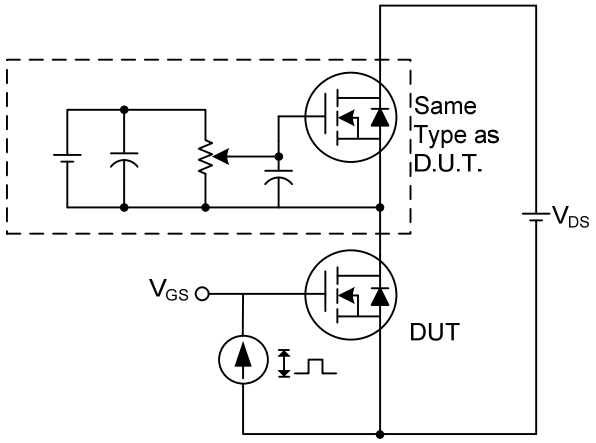

Gate Charge Test Circuit

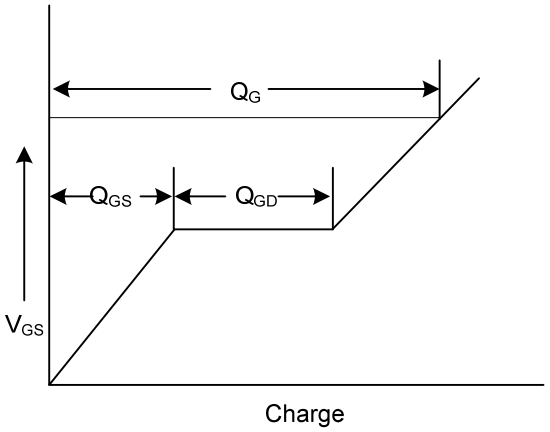

Gate Charge Waveform

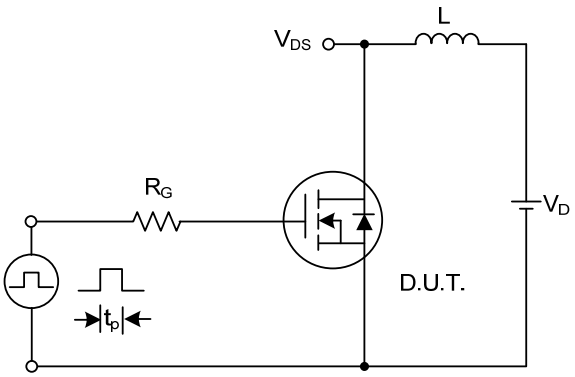

Unclamped Inductive Switching Test Circuit

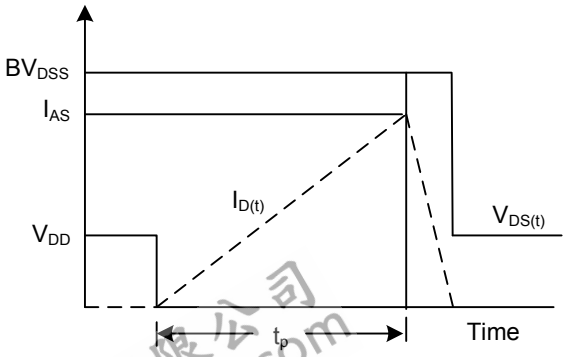

Unclamped Inductive Switching Waveforms

■ TYPICAL CHARACTERISTICS

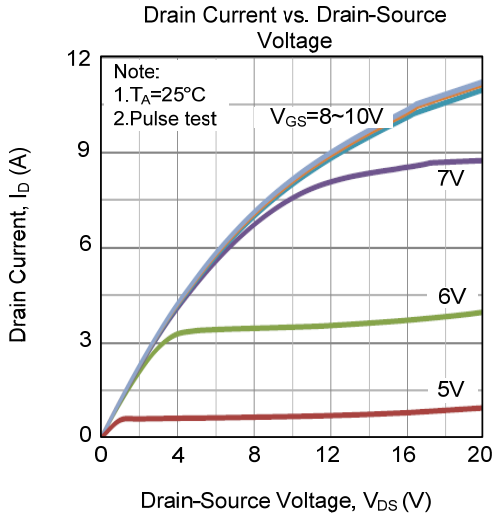

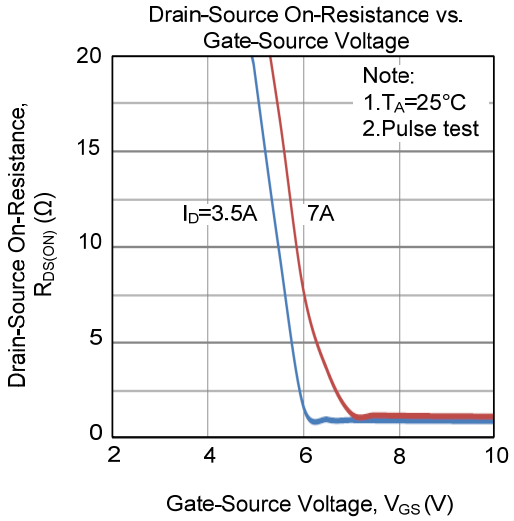

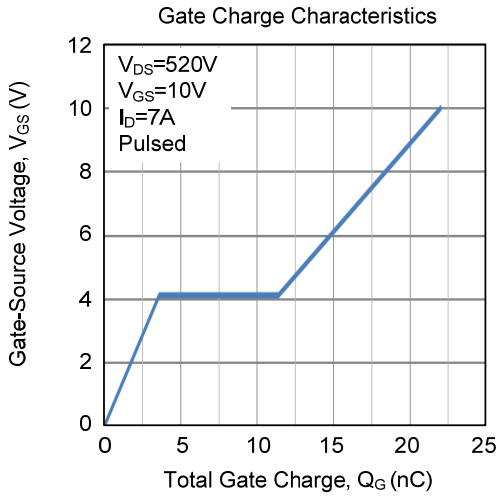

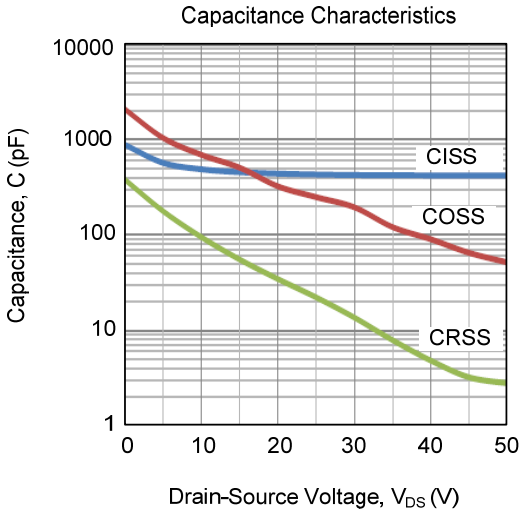

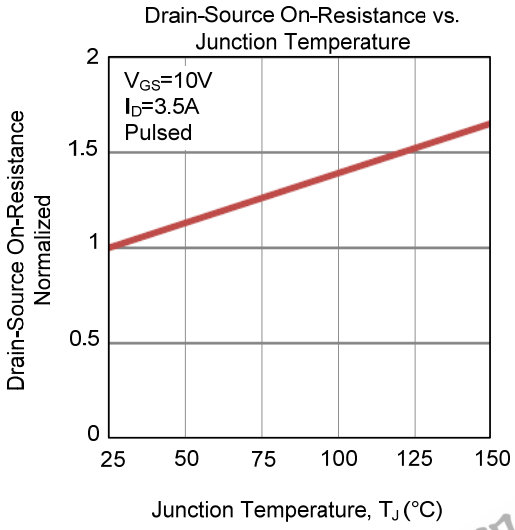

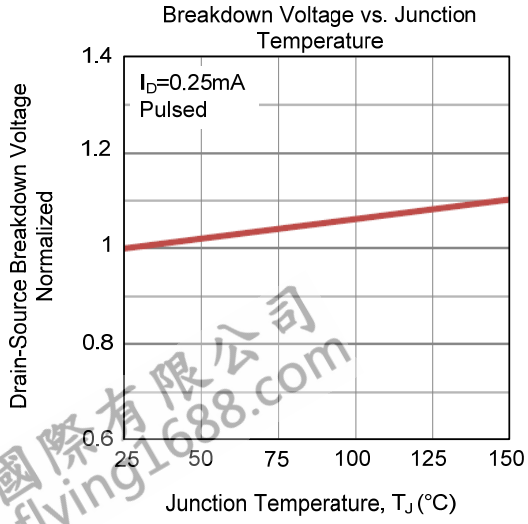

■ TYPICAL CHARACTERISTICS (Cont.)

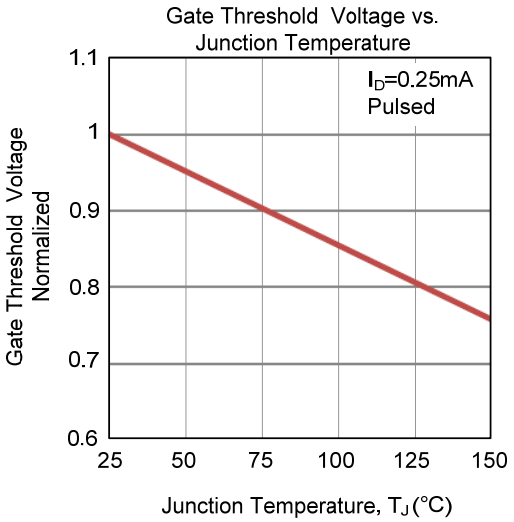

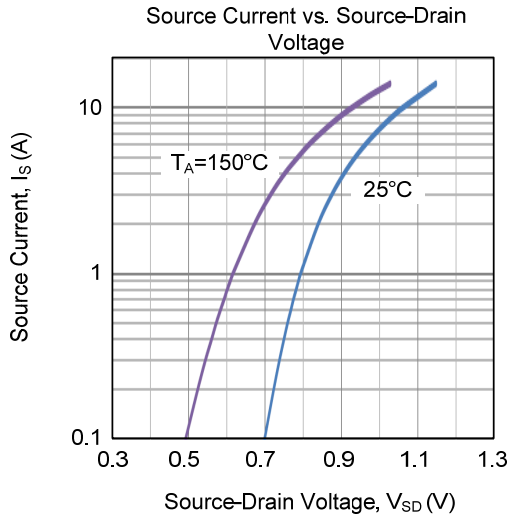

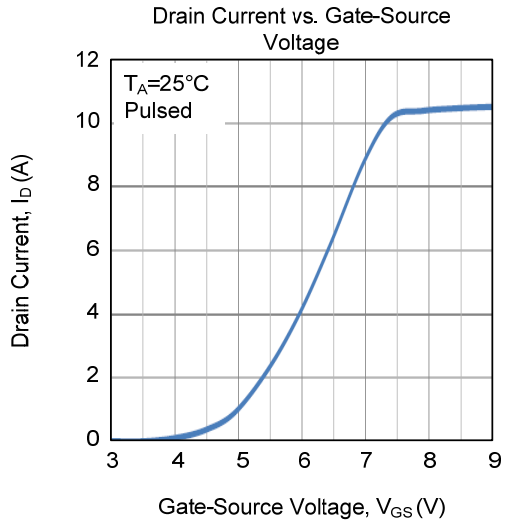

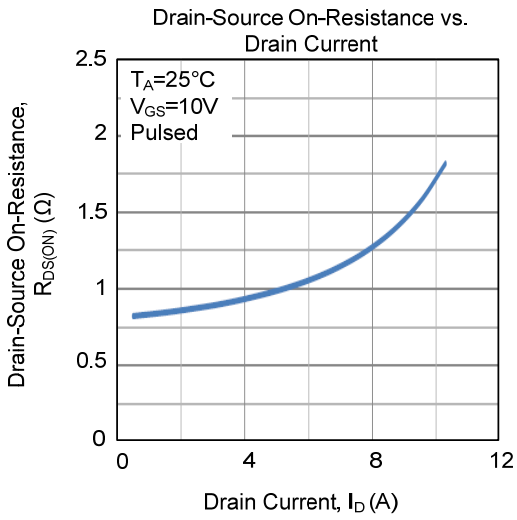

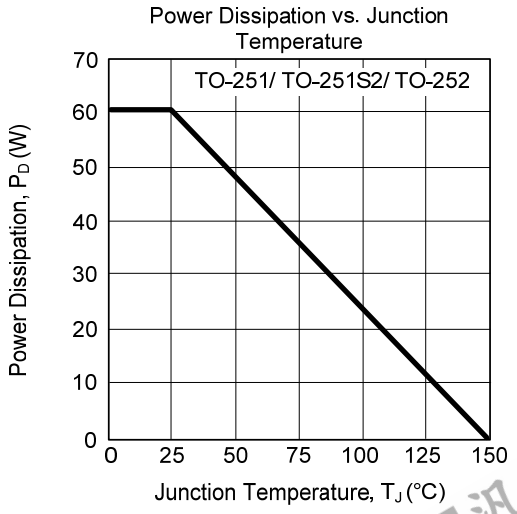

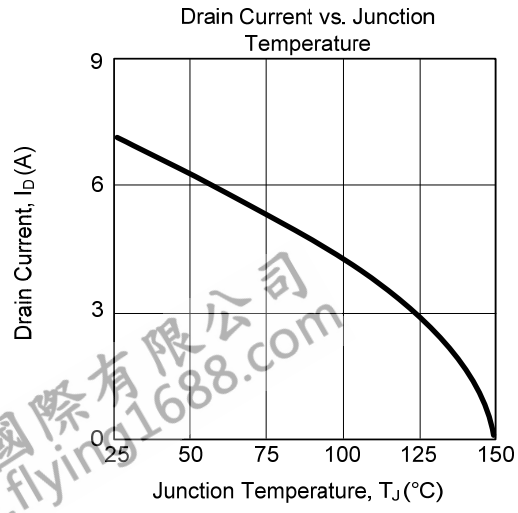

■ TYPICAL CHARACTERISTICS (Cont.)