8A, 650V N-CHANNEL SUPER-JUNCTION MOSFET

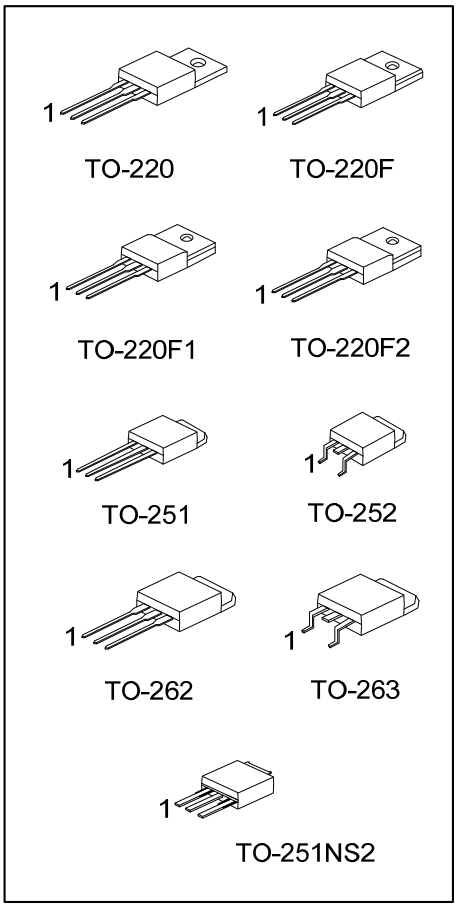

■ DESCRIPTION

The UTC **8NM65** is a Super Junction MOSFET Structure. It uses UTC advanced planar stripe, DMOS technology to provide customers perfect switching performance, minimal on-state resistance.

The UTC **8NM65** is universally applied in electronic lamp ballasts based on half bridge topology, high efficiency switched mode power supplies, active power factor correction, etc.

■ FEATURES

* $R_{DS(ON)} \leq 0.82\Omega$ @ V_{GS}=10V, I_D=4.0A
* Fast Switching Capability
* Avalanche Energy Tested
* Improved dv/dt Capability, High Ruggedness

■ SYMBOL

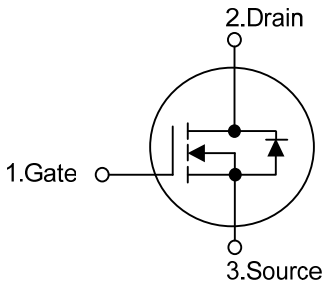

■ ORDERING INFORMATION

Order Number		Package	Pin Assignment			Packing
Lead Free	Halogen Free		1	2	3	
8NM65L-TA3-T	8NM65G-TA3-T	TO-220	G	D	S	Tube
8NM65L-TF1-T	8NM65G-TF1-T	TO-220F1	G	D	S	Tube
8NM65L-TF2-T	8NM65G-TF2-T	TO-220F2	G	D	S	Tube
8NM65L-TF3-T	8NM65G-TF3-T	TO-220F	G	D	S	Tube
8NM65L-TM3-T	8NM65G-TM3-T	TO-251	G	D	S	Tube
8NM65L-TMN2-T	8NM65G-TMN2-T	TO-251NS2	G	D	S	Tube
8NM65L-TN3-R	8NM65G-TN3-R	TO-252	G	D	S	Tape Reel
8NM65L-T2Q-T	8NM65G-T2Q-T	TO-262	G	D	S	Tube
8NM65L-TQ2-T	8NM65G-TQ2-T	TO-263	G	D	S	Tube
8NM65L-TQ2-R	8NM65G-TQ2-R	TO-263	G	D	S	Tape Reel

Note: Pin Assignment: G: Gate D: Drain S: Source

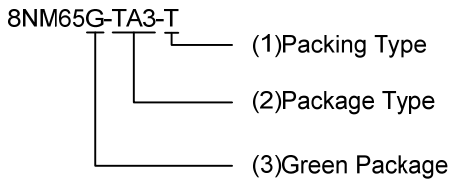

(1) T: Tube, R: Tape Reel
(2) TA3: TO-220, TF1: TO-220F1, TF2: TO-220F2
TF3: TO-220F, TM3: TO-251, TMN2: TO-251NS2
TN3: TO-252, T2Q: TO-262, TQ2: TO-263
(3) G: Halogen Free and Lead Free, L: Lead Free

■ MARKING

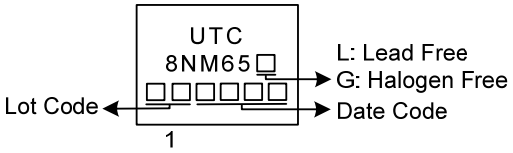

■ ABSOLUTE MAXIMUM RATINGS (T_C = 25°C, unless otherwise specified)

PARAMETER		SYMBOL	RATINGS	UNIT
Drain-Source Voltage		V_{DSS}	650	V
Gate-Source Voltage		V_{GSS}	±30	V
Drain Current	Continuous	I_D	8.0	A
	Pulsed (Note 2)	I_{DM}	32	A
Avalanche Current (Note 2)		I_{AR}	1.9	A
Avalanche Energy	Single Pulsed (Note 3)	E_{AS}	260	mJ
Peak Diode Recovery dv/dt (Note 4)		dv/dt	5.0	V/ns
Power Dissipation	TO-220/TO-262 TO-263	P_D	147	W
	TO-220F/TO-220F1 TO-220F2		48	W
	TO-251/TO-251NS2 TO-252		62	W
Junction Temperature		T_J	+150	°C
Storage Temperature		T_{STG}	-55 ~ +150	°C

Notes: 1. Absolute maximum ratings are those values beyond which the device could be permanently damaged. Absolute maximum ratings are stress ratings only and functional device operation is not implied.
2. Repetitive Rating : Pulse width limited by maximum junction temperature.
3. L=144mH, I_{AS}=1.9A, V_{DD}=50V, R_G=25 Ω, Starting T_J = 25°C
4. I_{SD}≤8.0A, di/dt≤200A/μs, V_{DD} ≤ BV_{DSS}, Starting T_J = 25°C

■ THERMAL DATA

PARAMETER		SYMBOL	RATINGS	UNIT
Junction to Ambient	TO-220/TO-220F TO-220F1/TO-220F2 TO-262/ TO-263	θ_{JA}	62.5	°C/W
	TO-251/TO-251NS2 TO-252		110	°C/W
Junction to Case	TO-220/TO-262 TO-263	θ_{JC}	0.85	°C/W
	TO-220F/TO-220F1 TO-220F2		2.6	°C/W
	TO-251/TO-251NS2 TO-252		2	°C/W

■ ELECTRICAL CHARACTERISTICS (T_J=25°C, unless otherwise specified)

PARAMETER		SYMBOL	TEST CONDITIONS	MIN	TYP	MAX	UNIT
OFF CHARACTERISTICS							
Drain-Source Breakdown Voltage		BV_{DSS}	V_{GS}=0V, I_D=250μA	650			V
Drain-Source Leakage Current		I_{DSS}	V_{DS}=650V, V_{GS}=0V			1	μA
Gate- Source Leakage Current	Forward	I_{GSS}	V_{GS}=30V, V_{DS}=0V			100	nA
	Reverse		V_{GS}=-30V, V_{DS}=0V			-100	nA
ON CHARACTERISTICS							
Gate Threshold Voltage		$V_{GS(TH)}$	V_{DS}=V_{GS}, I_D=250μA	2.5		4.5	V
Static Drain-Source On-State Resistance		$R_{DS(ON)}$	V_{GS}=10V, I_D=4.0A			0.82	Ω
DYNAMIC CHARACTERISTICS							
Input Capacitance		C_{ISS}	V_{DS}=25V, V_{GS}=0V, f=1.0 MHz		330		pF
Output Capacitance		C_{OSS}			248		pF
Reverse Transfer Capacitance		C_{RSS}			3.5		pF
SWITCHING PARAMETERS							
Total Gate Charge (Note 1)		Q_G	V_{DS}=520V, V_{GS}=10V I_D=8A, I_G=1mA (Note 1,2)		17		nC
Gate to Source Charge		Q_{GS}			4		nC
Gate to Drain Charge		Q_{GD}			5.5		nC
Turn-on Delay Time (Note 1)		$t_{D(ON)}$	V_{DD}=30V, V_{GS}=10V, I_D=0.5A, R_G =25Ω (Note 1, 2)		48		ns
Rise Time		t_R			76		ns
Turn-off Delay Time		$t_{D(OFF)}$			164		ns
Fall-Time		t_F			50		ns
SOURCE- DRAIN DIODE RATINGS AND CHARACTERISTICS							
Maximum Body-Diode Pulsed Current		I_S				8	A
Drain-Source Diode Forward Voltage (Note 1)		I_{SM}				32	A
Maximum Body-Diode Continuous Current		V_{SD}	I_S=8.0A, V_{GS}=0V			1.4	V
Reverse Recovery Time (Note 1)		t_{rr}	I_S=8.0A, V_{GS}=0V dI_F/dt=100A/μs		320		ns
Reverse Recovery Charge		Q_{rr}			3.6		μC

Notes: 1. Pulse Test: Pulse width ≤ 300μs, Duty cycle≤2%.
2. Essentially independent of operating temperature.

■ TEST CIRCUITS AND WAVEFORMS

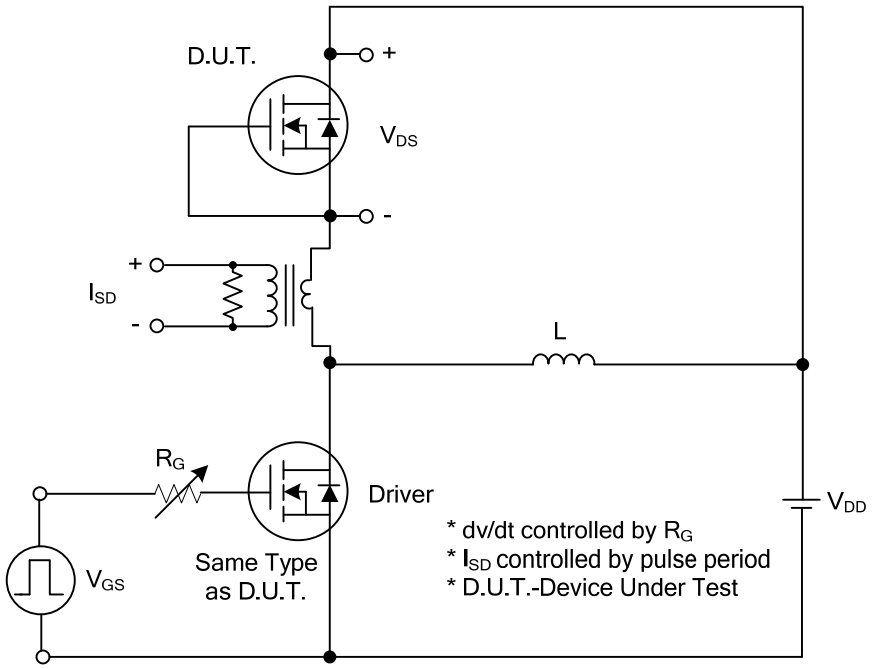

Peak Diode Recovery dv/dt Test Circuit

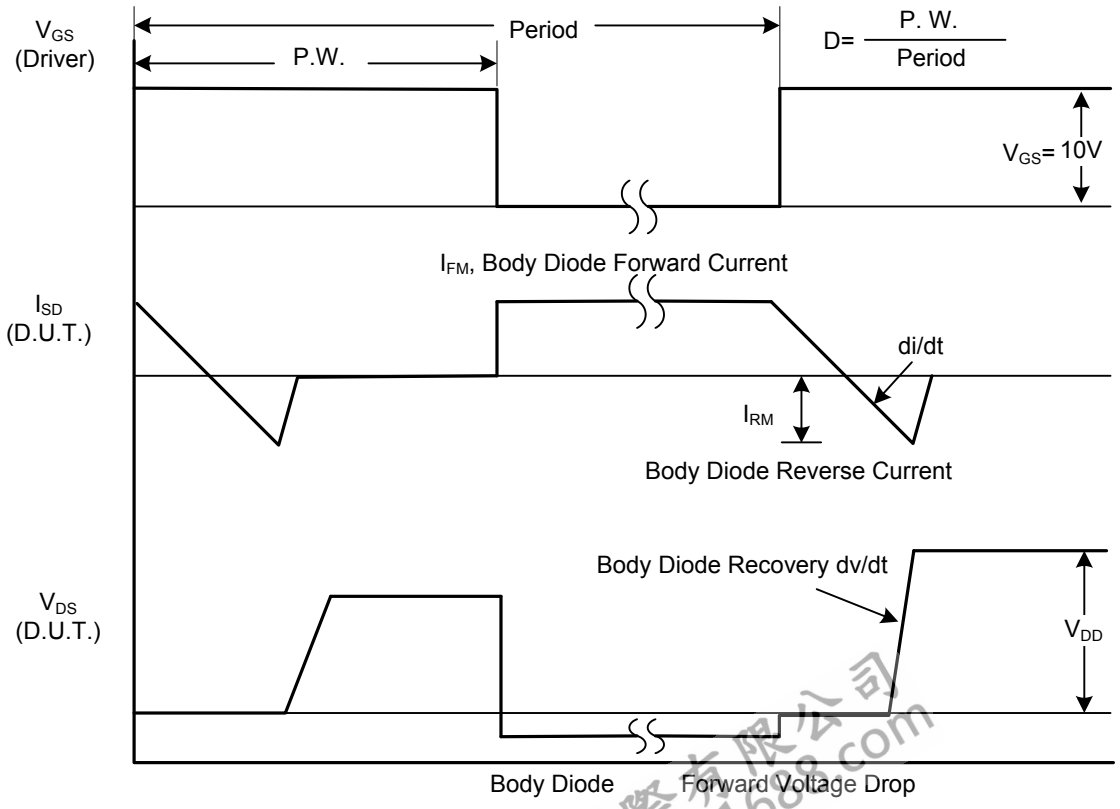

Peak Diode Recovery dv/dt Waveforms

■ TEST CIRCUITS AND WAVEFORMS

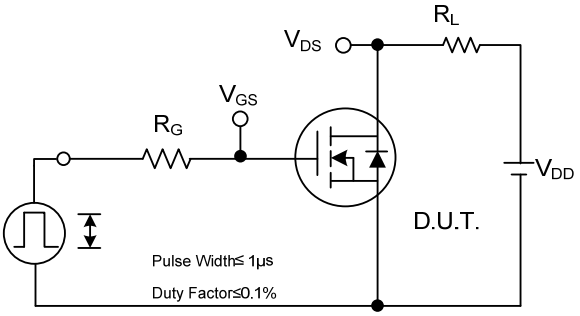

Switching Test Circuit

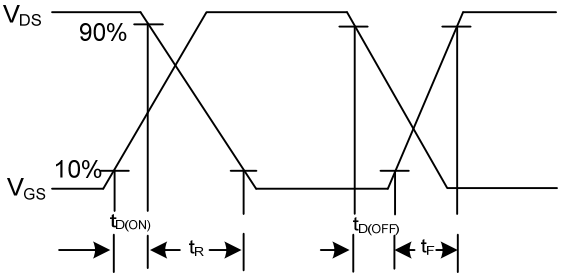

Switching Waveforms

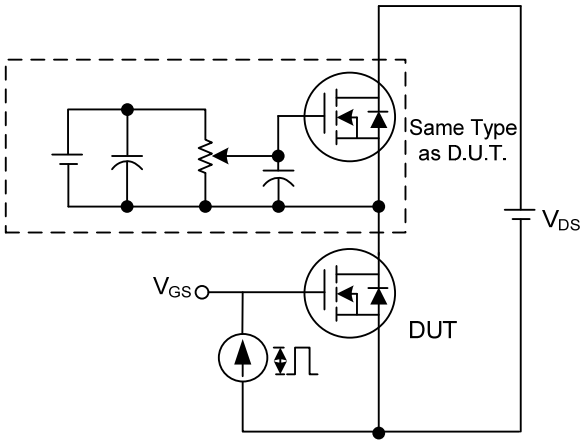

Gate Charge Test Circuit

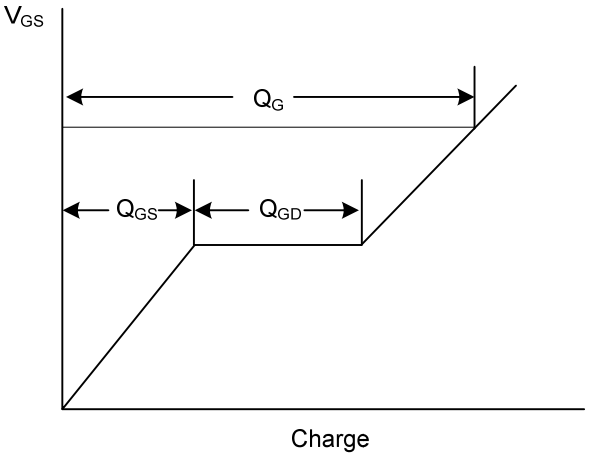

Gate Charge Waveform

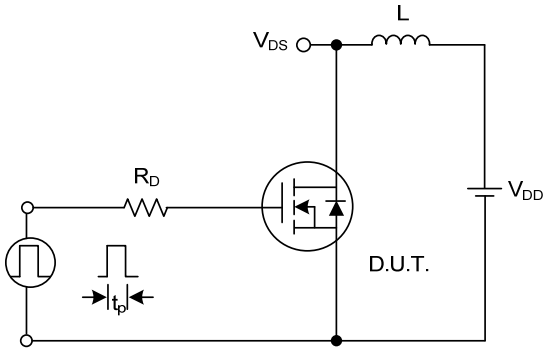

Unclamped Inductive Switching Test Circuit

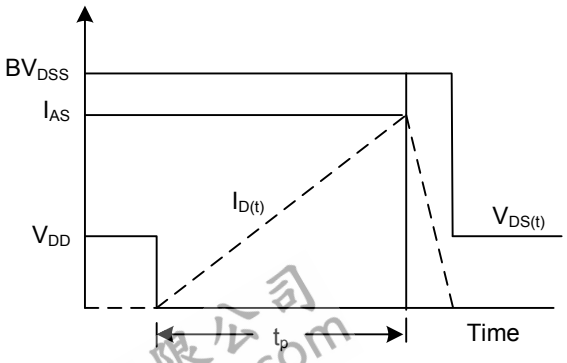

Unclamped Inductive Switching Waveforms

■ TYPICAL CHARACTERISTICS

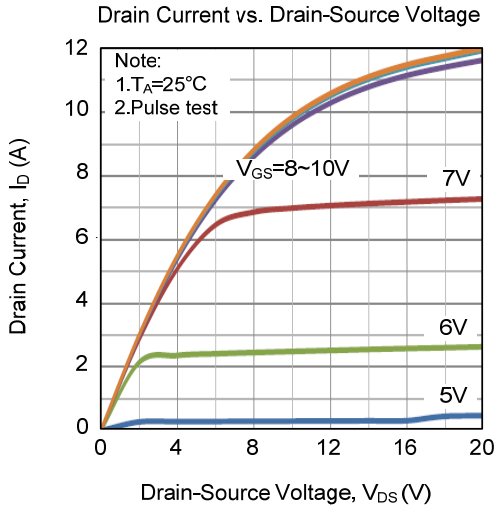

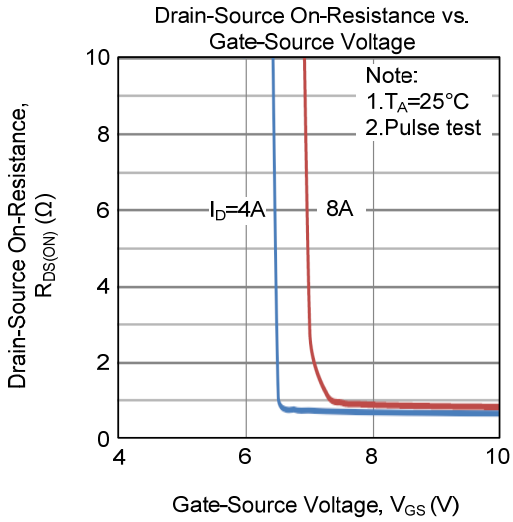

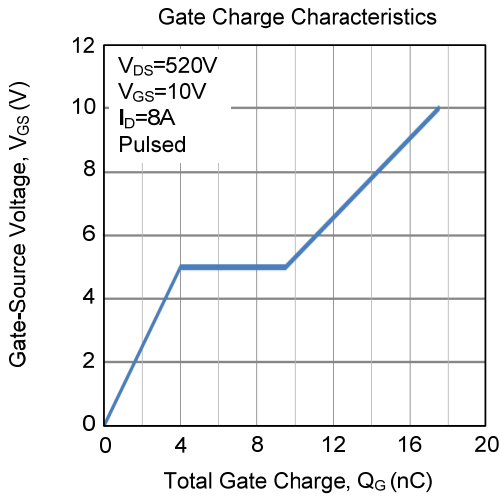

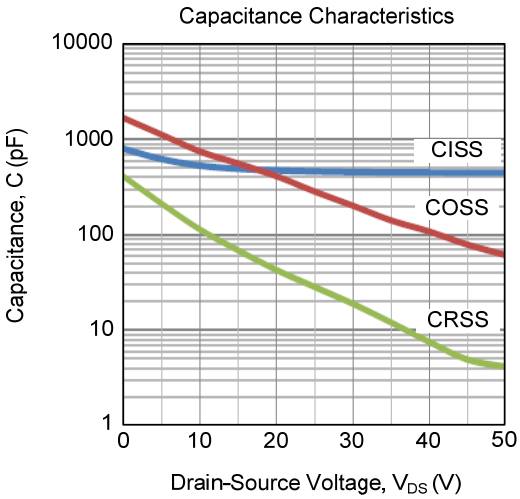

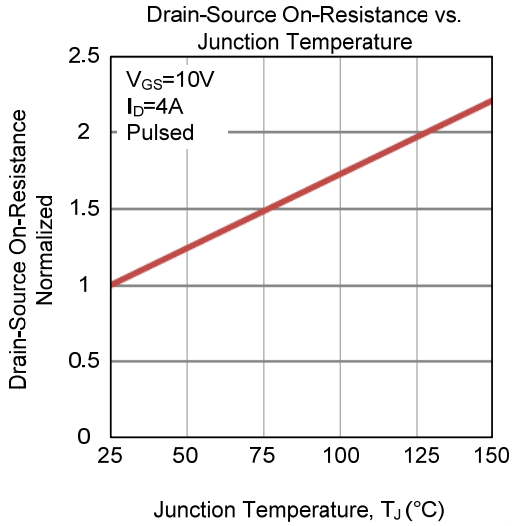

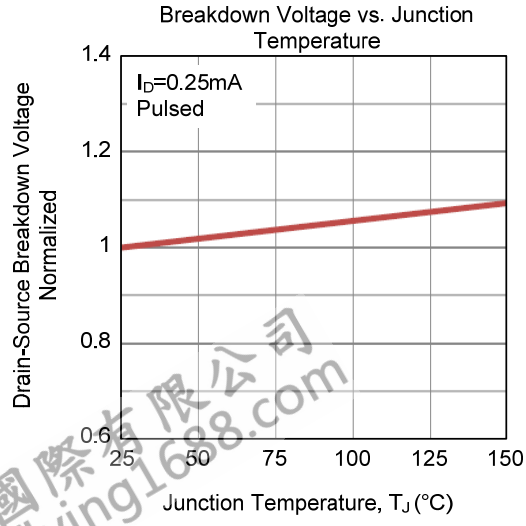

■ TYPICAL CHARACTERISTICS (Cont.)

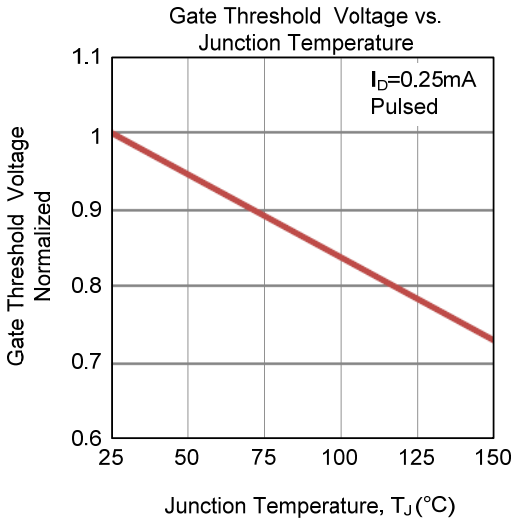

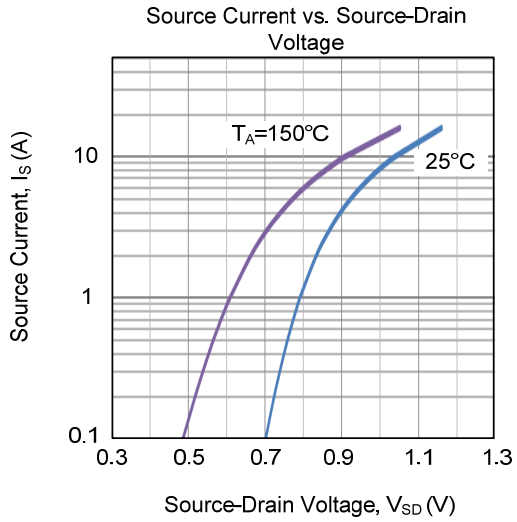

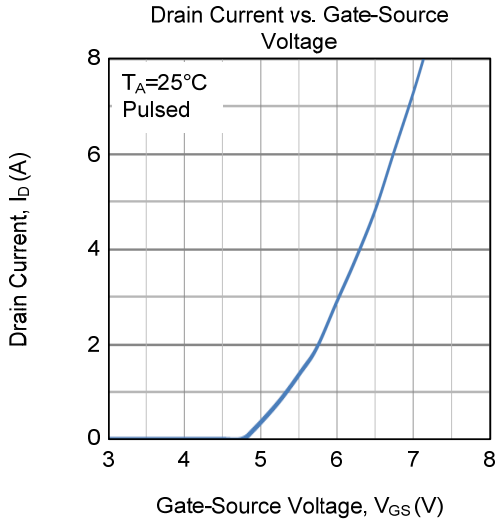

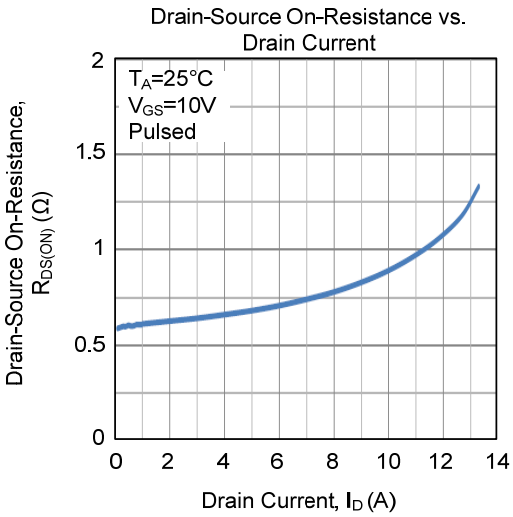

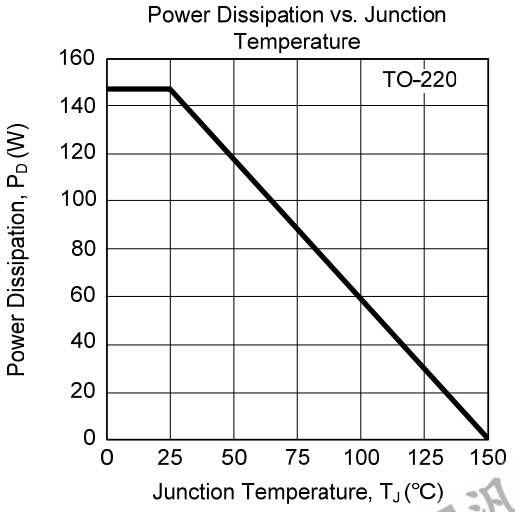

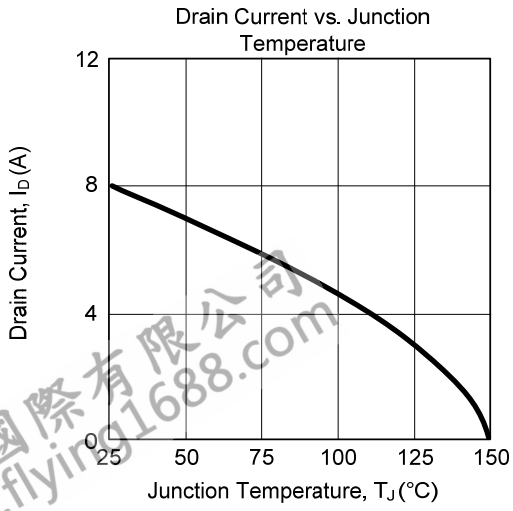

■ TYPICAL CHARACTERISTICS (Cont.)