9NM50 **Preliminary** ***Power MOSFET***

9.0A, 500V N-CHANNEL SUPER-JUNCTION MOSFET

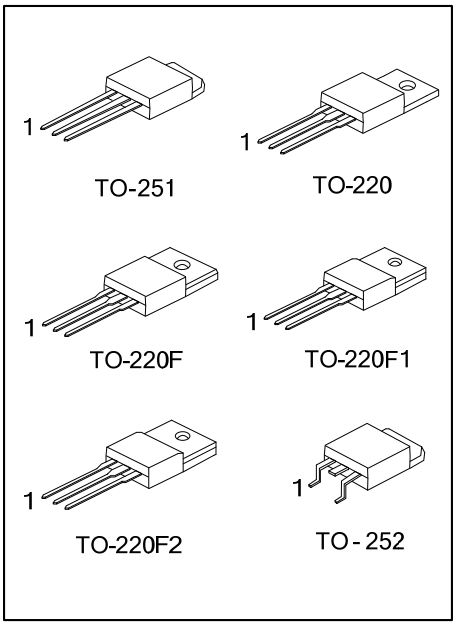

■ DESCRIPTION

The **UTC 9NM50** is a Super Junction MOSFET Structure and is designed to have better characteristics, such as fast switching time, low gate charge, low on-state resistance and a high rugged avalanche characteristics. This power MOSFET is usually used at DC-DC, AC-DC converters for power applications.

■ FEATURES

* $R_{DS(ON)}$ < 0.4Ω @ V_{GS}=10V, I_D=4.5A
* High switching Speed
* 100% avalanche tested
* Improved dv/dt capability

■ SYMBOL

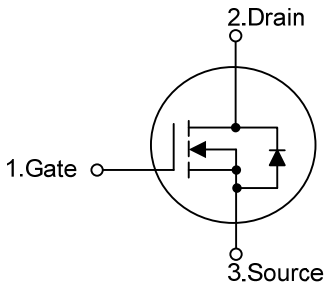

■ ORDERING INFORMATION

Ordering Number		Package	Pin Assignment			Packing
Lead Free	Halogen Free		1	2	3	
9NM50L-TA3-T	9NM50G-TA3-T	TO-220	G	D	S	Tube
9NM50L-TF1-T	9NM50G-TF1-T	TO-220F1	G	D	S	Tube
9NM50L-TF2-T	9NM50G-TF2-T	TO-220F2	G	D	S	Tube
9NM50L-TF3-T	9NM50G-TF3-T	TO-220F	G	D	S	Tube
9NM50L-TM3-T	9NM50G-TM3-T	TO-251	G	D	S	Tube
9NM50L-TN3-R	9NM50G-TN3-R	TO-252	G	D	S	Tape Reel

Note: Pin Assignment: G: Gate D: Drain S: Source

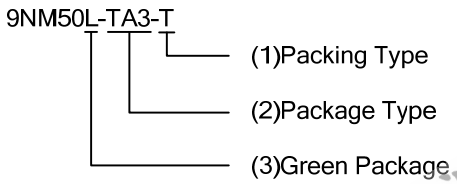

(1) T: Tube, R: Tape Reel
(2) TA3: TO-220, TF3: TO-220F, TF1: TO-220F1, TF2: TO-220F2, TM3: TO-251, TN3: TO-252
(3) L: Lead Free, G: Halogen Free and Lead Free

FLYING 汎翊國際有限公司 www.flying1688.com

Copyright © 2017 Unisonic Technologies Co., Ltd

■ MARKING

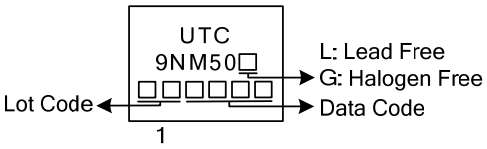

FLYING 汎翊國際有限公司 www.flying1688.com

■ ABSOLUTE MAXIMUM RATINGS (T_C=25°C, unless otherwise specified)

PARAMETER		SYMBOL	RATINGS	UNIT
Drain-Source Voltage		V_{DSS}	500	V
Gate-Source Voltage		V_{GSS}	±30	V
Drain Current	Continuous	I_D	9.0	A
	Pulsed (Note 2)	I_{DM}	36	A
Avalanche Current (Note 2)		I_{AR}	3.6	A
Avalanche Energy	Single Pulsed (Note 3)	E_{AS}	201	mJ
Peak Diode Recovery dv/dt (Note 4)		dv/dt	9.58	V/ns
Power Dissipation	TO-220	P_D	140	W
	TO-220F/TO-220F1 TO-220F2		47	W
	TO-251/TO-252		100	W
Junction Temperature		T_J	+150	°C
Storage Temperature		T_{STG}	-55 ~ +150	°C

Notes: 1. Absolute maximum ratings are those values beyond which the device could be permanently damaged. Absolute maximum ratings are stress ratings only and functional device operation is not implied.
2. Repetitive Rating: Pulse width limited by maximum junction temperature.
3. L = 31mH, I_{AS} = 3.6A, V_{DD} = 50V, R_G = 25Ω, Starting T_J = 25°C
4. I_{SD} ≤ 9.0A, di/dt ≤ 200A/μs, V_{DD} ≤ BV_{DSS}, Starting T_J = 25°C

■ THERMAL DATA

PARAMETER		SYMBOL	RATING	UNIT
Junction to Ambient	TO-220/TO-220F TO-220F1/TO-220F2	θ_{JA}	62.5	°C/W
	TO-251/TO-252		110	
Junction to Case	TO-220	θ_{JC}	0.89	°C/W
	TO-220F/TO-220F1 TO-220F2		2.66	
	TO-251/TO-252		1.25	

FLYING 汎翊國際有限公司 www.flying1688.com

■ ELECTRICAL CHARACTERISTICS (T_J=25°C, unless otherwise specified)

PARAMETER		SYMBOL	TEST CONDITIONS	MIN	TYP	MAX	UNIT
OFF CHARACTERISTICS							
Drain-Source Breakdown Voltage		BV_{DSS}	I_D=250μA, V_{GS}=0V	500			V
Drain-Source Leakage Current		I_{DSS}	V_{DS}=500V, V_{GS}=0V			10	μA
Gate- Source Leakage Current	Forward	I_{GSS}	V_{GS}=+30V			+100	nA
	Reverse		V_{GS}=-30V			-100	nA
ON CHARACTERISTICS							
Gate Threshold Voltage		$V_{GS(TH)}$	V_{DS}=V_{GS}, I_D=250μA	2.5		4.5	V
Static Drain-Source On-State Resistance		$R_{DS(ON)}$	V_{GS}=10V, I_D=4.5A			0.4	Ω
DYNAMIC PARAMETERS							
Input Capacitance		C_{ISS}	V_{GS}=0V, V_{DS}=25V, f=1.0MHz		580		pF
Output Capacitance		C_{OSS}			500		pF
Reverse Transfer Capacitance		C_{RSS}			68		pF
SWITCHING PARAMETERS							
Total Gate Charge (Note 1)		Q_G	V_{DS}=50V, V_{GS}=10V, I_D=1.3A , I_G=100μA (Note 1, 2)		70		nC
Gate to Source Charge		Q_{GS}			3.5		nC
Gate to Drain Charge		Q_{GD}			16		nC
Turn-ON Delay Time (Note 1)		$t_{D(ON)}$	V_{DD}=30V, V_{GS}=10V, I_D=0.5A, R_G=25Ω (Note 1, 2)		55		ns
Rise Time		t_R			120		ns
Turn-OFF Delay Time		$t_{D(OFF)}$			170		ns
Fall-Time		t_F			140		ns
SOURCE- DRAIN DIODE RATINGS AND CHARACTERISTICS							
Maximum Body-Diode Continuous Current		I_S				9	A
Maximum Body-Diode Pulsed Current		I_{SM}				36	A
Drain-Source Diode Forward Voltage (Note 1)		V_{SD}	I_S=9.0A, V_{GS}=0V			1.4	V
Reverse Recovery Time (Note 1)		t_{rr}	I_S=9.0A, V_{GS}=0V, dI_F/dt = 100 A/μs		290		ns
Reverse Recovery Charge		Q_{rr}			3.44		μC

Notes: 1. Pulse Test: Pulse width ≤ 300μs, Duty cycle ≤ 2%.
2. Essentially independent of operating temperature.

汎翊國際有限公司 www.flying1688.com FLYING

■ TEST CIRCUITS AND WAVEFORMS

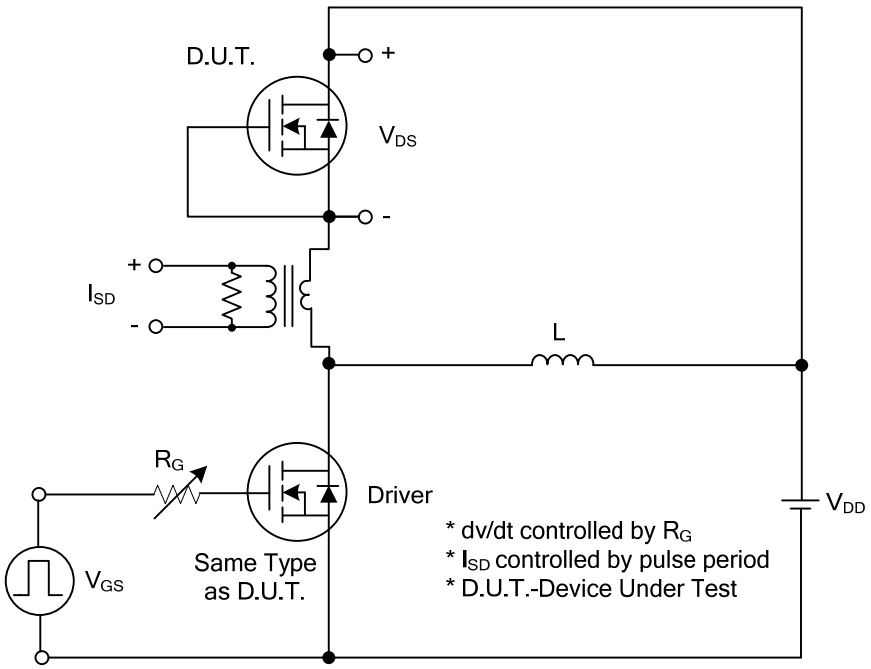

Peak Diode Recovery dv/dt Test Circuit

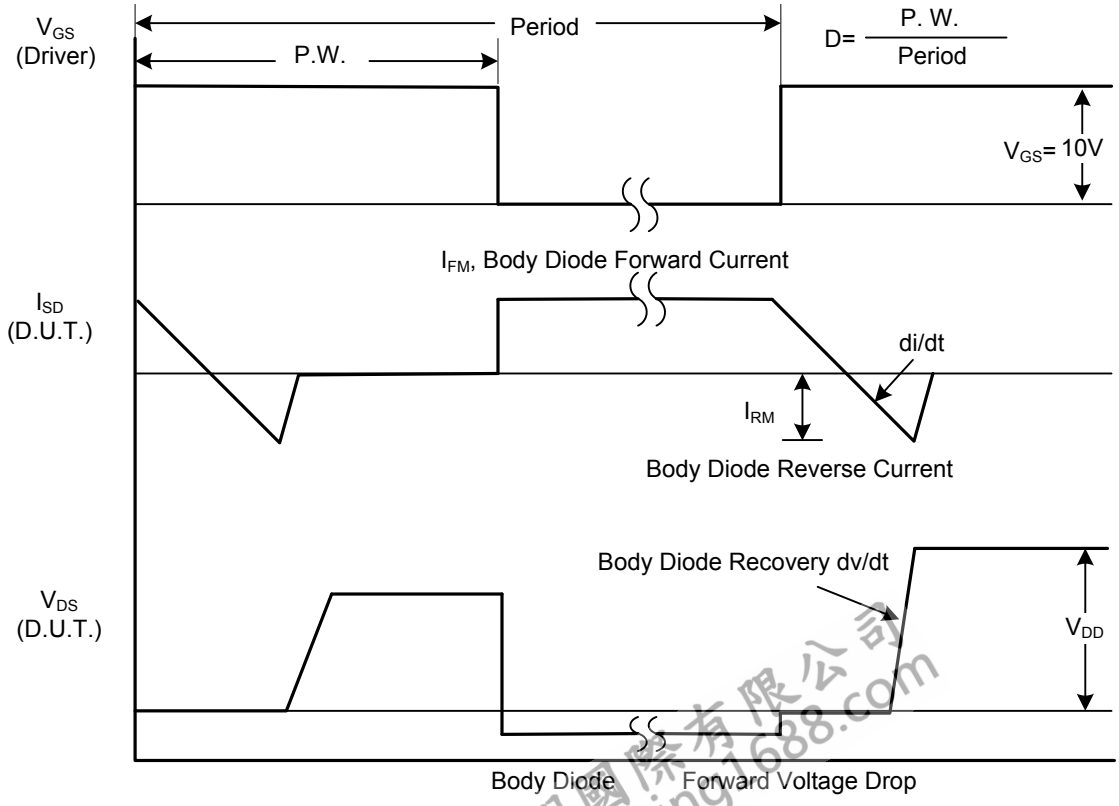

Peak Diode Recovery dv/dt Waveforms

FLYING 沈阳国际有限公司 www.flying1688.com

■ TEST CIRCUITS AND WAVEFORMS (Cont.)

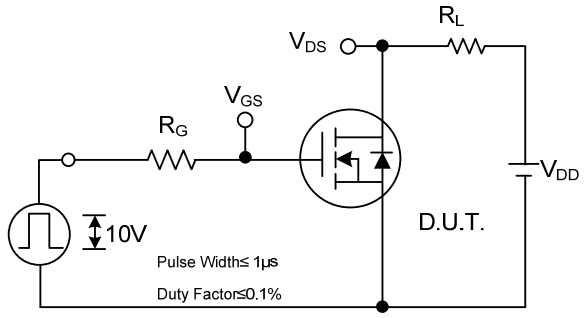

Switching Test Circuit

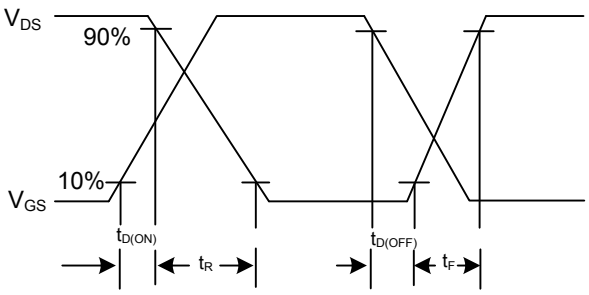

Switching Waveforms

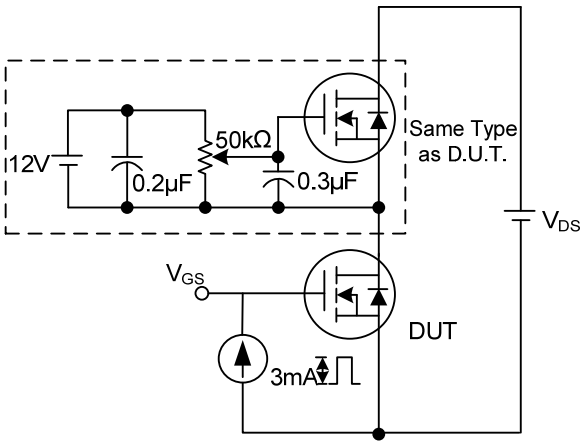

Gate Charge Test Circuit

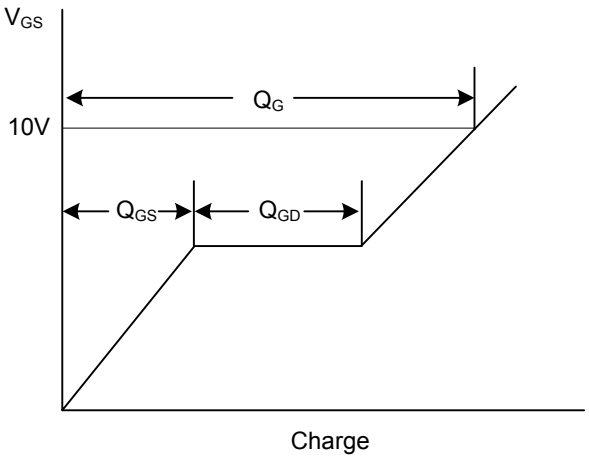

Gate Charge Waveform

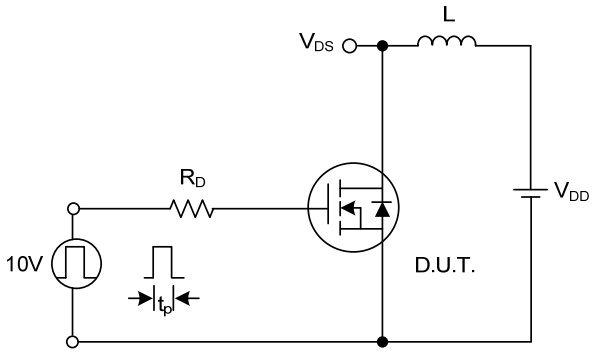

Unclamped Inductive Switching Test Circuit

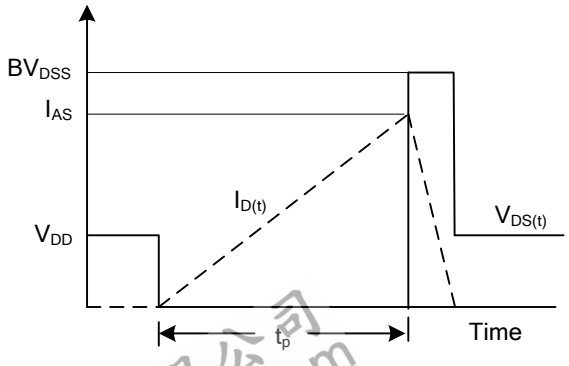

Unclamped Inductive Switching Waveforms

FLYING 汎翊國際有限公司 www.flying1688.com

UTC assumes no responsibility for equipment failures that result from using products at values that exceed, even momentarily, rated values (such as maximum ratings, operating condition ranges, or other parameters) listed in products specifications of any and all UTC products described or contained herein. UTC products are not designed for use in life support appliances, devices or systems where malfunction of these products can be reasonably expected to result in personal injury. Reproduction in whole or in part is prohibited without the prior written consent of the copyright owner. The information presented in this document does not form part of any quotation or contract, is believed to be accurate and reliable and may be changed without notice.

FLYING 沈翔國際有限公司 www.flying1688.com