100mA, 4μA QUIESCENT CURRENT CMOS LDO REGULATOR

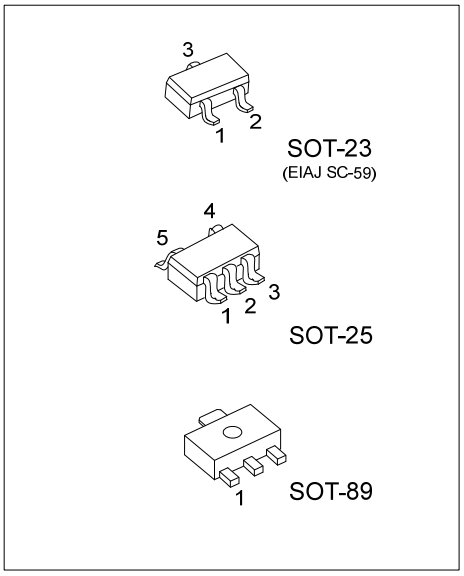

■ DESCRIPTION

The UTC **LR1101** series are ultra-low quiescent current CMOS LDO (Low Dropout Voltage). Designed for battery-powered system, the low 4μA quiescent current makes it an ideal choice. The Range of the output voltage is from 1.5V ~ 5V with 0.1V per step. And the max output current is 100mA.

Wide range of available output fits most of applications. Built-in output current-limiting provide maximal protection against any fault conditions.

■ FEATURES

* 450mV typically dropout at 100mA
* Ultra-low quiescent current: 4μA
* Wide operating voltage ranges: 2V ~ 6V
* Thermal current limiting protection
* For stability only 1μF output capacitor is required
* High power supply rejection ratio

■ ORDERING INFORMATION

Ordering Number		Package	Pin Assignment					Packing
Lead Free	Halogen Free		1	2	3	4	5	
LR1101L-xx-AB3-C-R	LR1101G-xx-AB3-C-R	SOT-89	G	I	O	-	-	Tape Reel
LR1101L-xx-AE3-5-R	LR1101G-xx-AE3-5-R	SOT-23	O	G	I	-	-	Tape Reel
LR1101L-xx-AF5-R	LR1101G-xx-AF5-R	SOT-25	I	G	$\overline{EN}$	NC	O	Tape Reel

Note: Pin Assignment: G: GND I: V_{IN} O: V_{OUT} NC: No Connection $\overline{EN}$: Enable

LR1101G-xx-AB3-C-R

(1)Packing Type
(2)Pin Assignment
(3)Package Type
(4)Output Voltage Code
(5)Green Package

(1) R:Tape Reel
(2) refer to Pin Assignment
(3) AB3: SOT-89, AE3: SOT-23, AF5: SOT-25
(4) xx: refer to Marking Information
(5) G: Halogen Free and Lead Free, L: Lead Free

■ MARKING INFORMATIONS

PACKAGE	VOLTAGE CODE	PIN CODE	1	2	3	4	5	MARKING
SOT-89	15:1.5V 18:1.8V 25:2.5V 28:2.8V 30:3.0V 33:3.3V 35:3.5V 36:3.6V 47:4.7V 50:5.0V	C	G	I	O	-	-	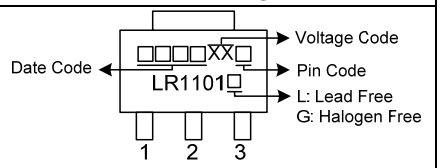
SOT-25		-	I	G	$\overline{EN}$	NC	O	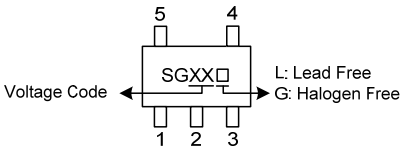
SOT-23		5	O	G	I	-	-	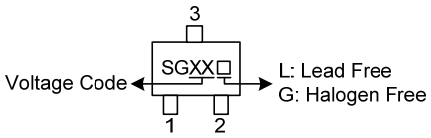

■ PIN DESCRIPTION

PIN NO.			PIN NAME	DESCRIPTION
SOT-89	SOT-25	SOT-23		
1	2	2	GND	Ground
2	1	3	V_{IN}	Input voltage
3	5	1	V_{OUT}	Output voltage
-	3	-	$\overline{EN}$	Chip enable input
-	4	-	NC	No connection

■ BLOCK DIAGRAM

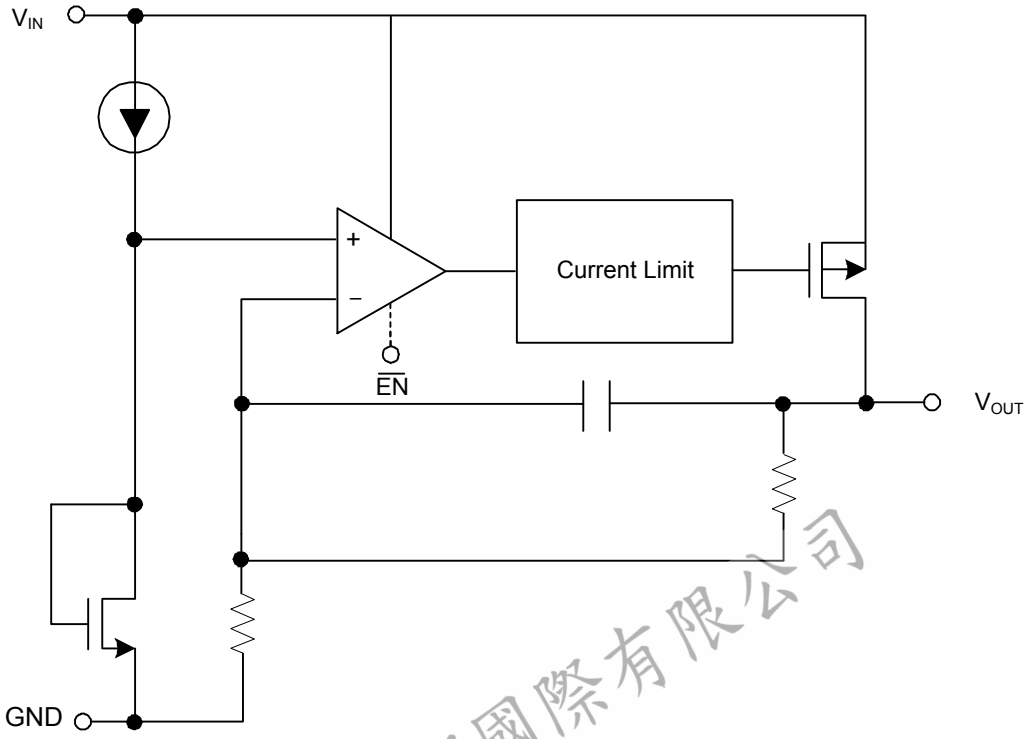

■ ABSOLUTE MAXIMUM RATINGS

PARAMETER		SYMBOL	RATINGS	UNIT
Input Voltage		V_{IN}	7	V
Power Dissipation (T_A = 25°C)	SOT-89	P_D	500	mW
	SOT-23		250	mW
	SOT-25		250	mW
Junction Temperature		T_J	+125	°C
Operating Temperature		T_{OPR}	-40 ~ +85	°C
Storage Temperature		T_{STG}	-65 ~ +150	°C

Note: Absolute maximum ratings are those values beyond which the device could be permanently damaged. Absolute maximum ratings are stress ratings only and functional device operation is not implied.

■ THERMAL DATA

PARAMETER		SYMBOL	RATINGS	UNIT
Thermal Resistance	SOT-89	θ_{JA}	180	°C/W
	SOT-23		250	°C/W
	SOT-25		250	°C/W

■ ELECTRICAL CHARACTERISTICS(V_{IN} =5.5V, C_I =1μF, Co=1μF,T_A=25°C, unless otherwise specified)

PARAMETER	SYMBOL	TEST CONDITIONS	MIN.	TYP.	MAX.	UNIT
Input Voltage Range	V_{IN}		2		6	V
Output Voltage Accuracy	ΔV_{OUT}	I_L = 1mA	-2		+2	%
Line Regulation	ΔV_{LINE}	V_{IN} = (V_{OUT} + 0.3V) to 6V, $V_{IN} \geqq 3.6V$, I_{OUT} = 1mA	-0.2		0.2	%/V
Load Regulation	ΔV_{LOAD}	I_{LOUT} = 0mA to 100mA		0.01	0.04	%/mA
Maximum Output Current	I_{MAX}	V_{IN} = V_{OUT} + 0.6V, $V_{IN} \geqq 3.6V$	100			mA
Current Limit	I_{LIMIT}	I_L = 100mA	150	250		mA
GND Pin Current	I_G	No Load		4	7	μA
		I_{OUT} = 100mA		4	10	
Dropout Voltage	V_D	I_{OUT} = 1mA, $V_{IN} \geqq 3.6V$		4	10	mV
		I_{OUT} = 50mA, $V_{IN} \geqq 3.6V$		200	300	
		I_{OUT} = 100mA, $V_{IN} \geqq 3.6V$		450	600	
Stand By Current	I_{STN-BY}	$\overline{EN}$ = V_{IN}		0.1	1	μA
$\overline{EN}$ Threshold	$\overline{EN}$	V_{OUT} = High	0		0.6	V
		V_{OUT} = Low	2		V_{IN}	
Short Current	I_{SC}	V_{OUT} = 0			650	mA
Thermal Shutdown		Exterior Calefaction	125			°C

■ APPLICATION INFORMATION

Between V_{OUT} and GND a 1μF (or larger) capacitor is recommended for stability. Without the capacitor the part may oscillate. When operating below -25°C any type of capacitor can be used, but not Aluminum electrolytes. If there's no limit the capacitance may be increased.

Between V_{IN} to GND a 1μF capacitor (or larger) should be placed.

■ APPLICATION CIRCUIT

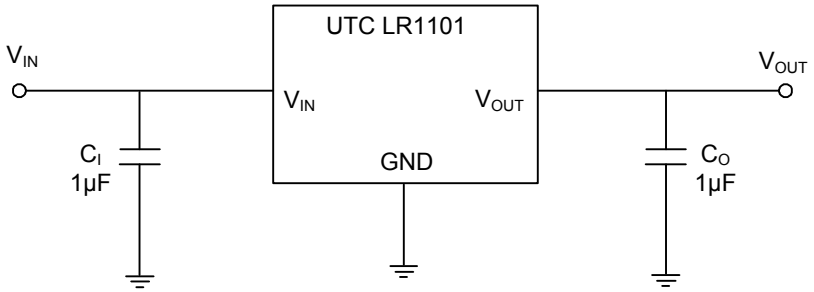

■ TYPICAL CHARACTERISTICS

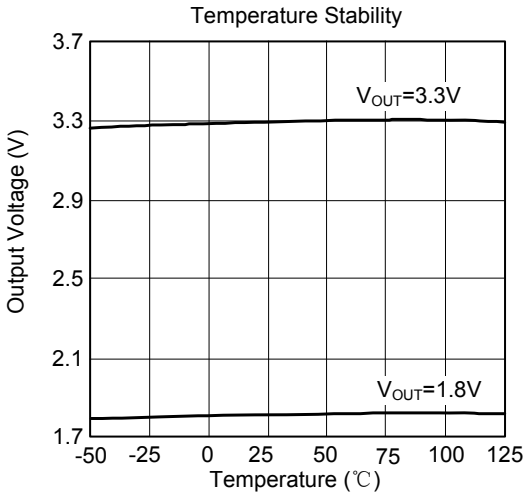

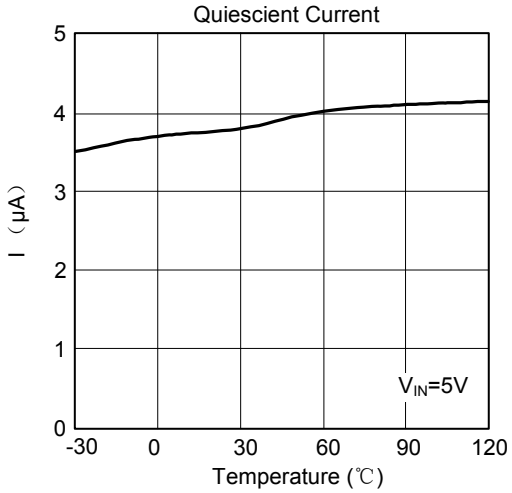

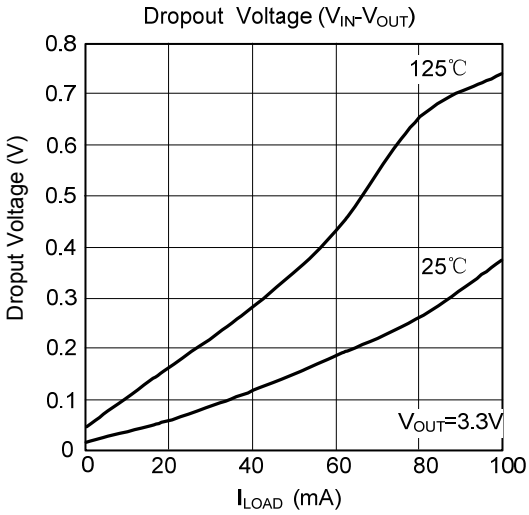

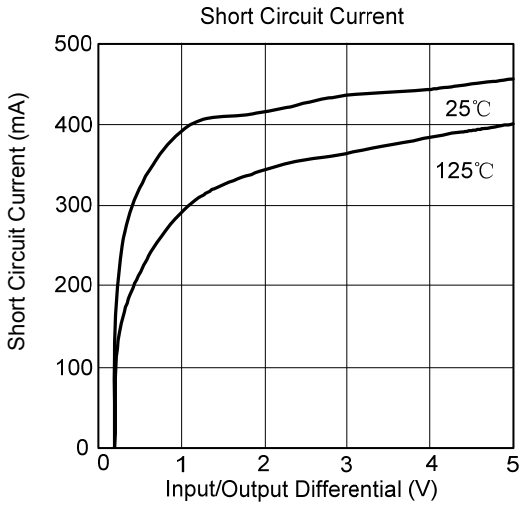

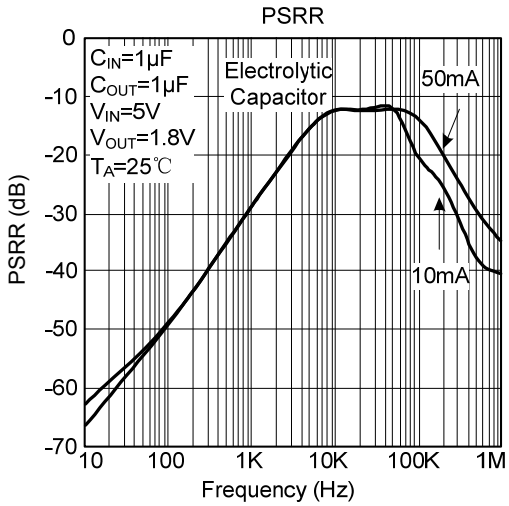

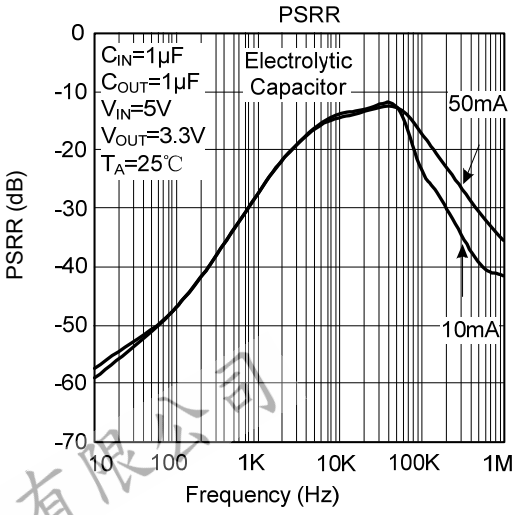

■ TYPICAL CHARACTERISTICS (Cont.)