LR8XXYY

CMOS IC

150mA DUAL LDO REGULATOR

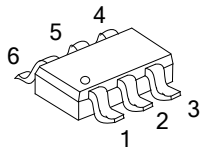

SOT-26
(JDEDE SC59-6)

DFN1616-6

■ DESCRIPTION

The UTC **LR8XXYY** Series are a low dropout regulator with high output voltage accuracy, low quiescent current, low dropout, and high ripple rejection. This regulator is based on a CMOS process. Each of these regulator ICs contains dual LDO regulator, both of them includes a voltage reference, an error amplifier, resistors for setting Output Voltage, a current limit circuit, and a chip enable circuit.

The UTC **LR8XXYY** Series exhibit ultra excellent line transient response and load transient response, thus they are very suitable for the power supply for hand-held communication equipment.

■ FEATURES

* Supply Current: TYP. 40μA (VR1, VR2)
* Standby Mode: TYP. 0.1μA (VR1, VR2)
* Low Dropout Voltage: TYP. 0.22V(I_{OUT}=150mA, V_{OUT}=2.8V)
* High Ripple Rejection: TYP. 70dB (f=1kHz), TYP. 65dB (f=10kHz)
* High Output Voltage Accuracy: ±1.0%
* Low Temperature-Drift Coefficient of Output Voltage: TYP. ±80ppm/°C
* Excellent Line Regulation: TYP. 0.02%/V
* Built-in Fold Back Protection Circuit TYP. 40mA (Current at short mode)
* Ceramic capacitors are recommended to be used with this IC 0.22μF or more

■ RDERING INFORMATION

Ordering Number		Package	Packing
Lead Free	Halogen Free		
LR8XXYYBG-AG6-R	LR8XXYYBG-AG6-R	SOT-26	Tape Reel
LR8XXYYBG-K06-1616-R	LR8XXYYBG-K06-1616-R	DFN1616-6	Tape Reel

Note: XXYY: Output Voltage, refer to Marking Information.

LR8XXYYBG-AG6-R

(1)Packing Type	(1) R: Tape Reel
(2)Package Type	(2) AG6: SOT-26, K06-1616: DFN1616-6
(3)Green Package	(3) G: Halogen Free and Lead Free
(4)Discharge Function	(4) B: without auto-discharge function at off state
(5)Voltage Code at V_{OUT2}	(5) YY: refer to Marking Information
(6)Voltage Code at V_{OUT1}	(6) XX: refer to Marking Information

■ MARKING INFORMATIONS

PACKAGE	VOLTAGE CODE				MARKING
	CODE	X	CODE	Y	
SOT-26	1	1.2V	1	1.2V	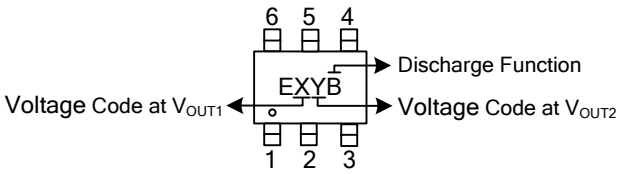
	2	1.5V	2	1.5V	
	3	1.8V	3	1.8V	
	4	2.0V	4	2.0V	
DFN1616-6	5	2.5V	5	2.5V	
	6	2.8V	6	2.8V	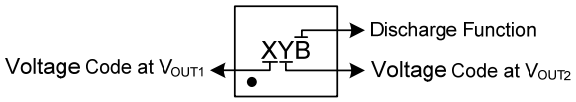
	7	3.0V	7	3.0V	
	8	3.3V	8	3.3V	
	9	3.6V	9	3.6V	

■ PIN CONFIGURATION

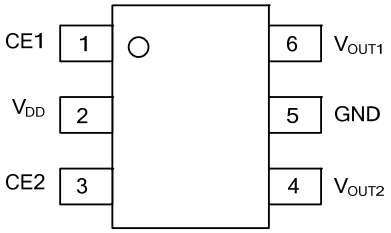

SOT-26

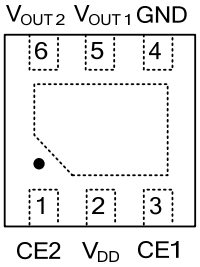

DFN1616-6

■ PIN DESCRIPTION

PIN NO.		PIN NAME	DESCRIPTION
SOT-26	DFN1616-6		
1	3	CE1	Chip Enable Pin 1 (“H” Active)
2	2	V_{DD}	Input Pin
3	1	CE2	Chip Enable Pin 2 (“H” Active)
4	6	V_{OUT2}	Output Pin 2
5	4	GND	Ground Pin
6	5	V_{OUT1}	Output Pin 1

■ BLOCK DIAGRAM

UTC LR8XXYYB
(With Auto Discharge)

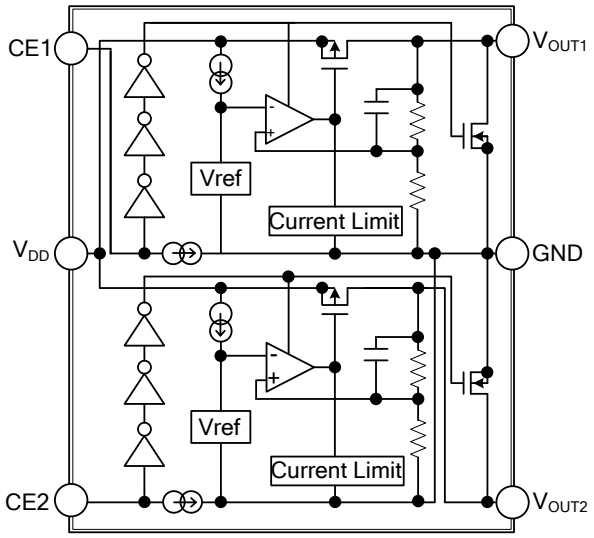

■ ABSOLUTE MAXIMUM RATINGS

PARAMETER		SYMBOL	RATINGS	UNIT
Input Voltage		V_{IN}	6.0	V
Input Voltage (CE Pin)		V_{CE}	-0.3 ~ 6.0	V
Output Voltage		V_{OUT}	-0.3 ~ V_{IN}+0.3	V
Output Current 1		I_{OUT1}	180	mA
Output Current 2		I_{OUT2}	180	mA
Power Dissipation	SOT-26	P_D	420	mW
	DFN1616-6		138	mW
Operating Temperature Range		T_{OPR}	-40 ~ +85	°C
Storage Temperature Range		T_{STG}	-55 ~ +125	°C

Note: Absolute maximum ratings are those values beyond which the device could be permanently damaged. Absolute maximum ratings are stress ratings only and functional device operation is not implied.

■ ELECTRICAL CHARACTERISTICS

(V_{IN}=Set V_{OUT}+1.0V for V_{OUT} options greater than 1.5V, V_{IN}=2.5V for V_{OUT}≤1.5V, I_{OUT}=1mA, C_{IN}=C_{OUT}=0.22μF unless otherwise noted. (T_A=25°C))

PARAMETER	SYMBOL	TEST CONDITIONS		MIN	TYP	MAX	UNIT
Output Voltage	V_{OUT}	T_A=25°C	V_{OUT}>2.0V	x 0.99		x 1.01	V
			V_{OUT}≤2.0V	-20		+20	mV
Output Current	I_{OUT}			150			mA
Load Regulation	$\frac{\Delta V_{OUT}}{\Delta I_{OUT}}$	1mA≤I_{OUT}≤150mA	0.8V≤V_{OUT}<1.1V		10		mV
			1.1V≤V_{OUT}<1.6V		15		
			1.6V≤V_{OUT}<2.0V		15		
			2.0V≤V_{OUT}≤3.6V		15		
Dropout Voltage	V_{DIF}	I_{OUT}=150mA	V_{OUT}=0.8V		0.63		V
			V_{OUT}=0.9V		0.55		
			1.0V≤V_{OUT}<1.2V		0.50		
			1.2V≤V_{OUT}<1.4V		0.42		
			1.4V≤V_{OUT}<1.7V		0.37		
			1.7V≤V_{OUT}<2.1V		0.30		
			2.1V≤V_{OUT}<2.5V		0.25		
			2.5V≤V_{OUT}<3.0V		0.23		
			3.0V≤V_{OUT}≤3.6V		0.21		
Supply Current	I_{SS}	I_{OUT}=0mA			50	60	μA
Supply Current (Standby)	$I_{STANDBY}$	V_{CE}=0V			0.1		μA
Line Regulation	$\frac{\Delta V_{OUT}}{\Delta V_{IN}}$	Set V_{OUT}+0.5V≤V_{IN}≤5.0V			0.02		%/V
Ripple Rejection	RR	f=1kHz, Ripple 0.2Vp-p, V_{IN}=Set V_{OUT}+1.0V, I_{OUT}=30mA (In case V_{OUT}≤2.0V, V_{IN}=3.0V)			70		dB
Input Voltage (Note 1)	V_{IN}					5.25	V
Output Voltage Temperature Coefficient	$\frac{\Delta V_{OUT}}{\Delta T_{OPT}}$	-40°C≤Ta≤85°C			±80		ppm
Short Current	I_{LIM}	V_{OUT}=0V			40		mA

■ ELECTRICAL CHARACTERISTICS (Cont.)

PARAMETER	SYMBOL	TEST CONDITIONS		MIN	TYP	MAX	UNIT
CE Pull-down Current	I_{PD}				0.3		μA
CE Input Voltage "H"	V_{CEH}			1.0			V
CE Input Voltage "L"	V_{CEL}					0.4	V
Output Noise	en	BW=10Hz ~ 100kHz			60		μVrms
Nch ON Resistance For Auto Discharge (B/C/E Version Only)	R_{LOW}	V_{IN}=4.0V, V_{CE}=0V	C Ver. (VR2)		10		Ω
			Others		50		Ω

Notes: 1. The specification in **boldface** is checked and guaranteed by design engineering.
2. All of unit are tested and specified under load conditions such that $T_J \approx T_A$=25°C except for Output Noise, Ripple Rejection and Output Voltage Temperature Coefficient items.
3. The maximum Input Voltage of the ELECTRICAL CHARACTERISTICS is 5.25V. In case of exceeding this specification, the IC must be operated on condition that the Input Voltage is up to 5.5V and the total operating time is within 500hrs.

■ TYPICAL APPLICATION CIRCUIT

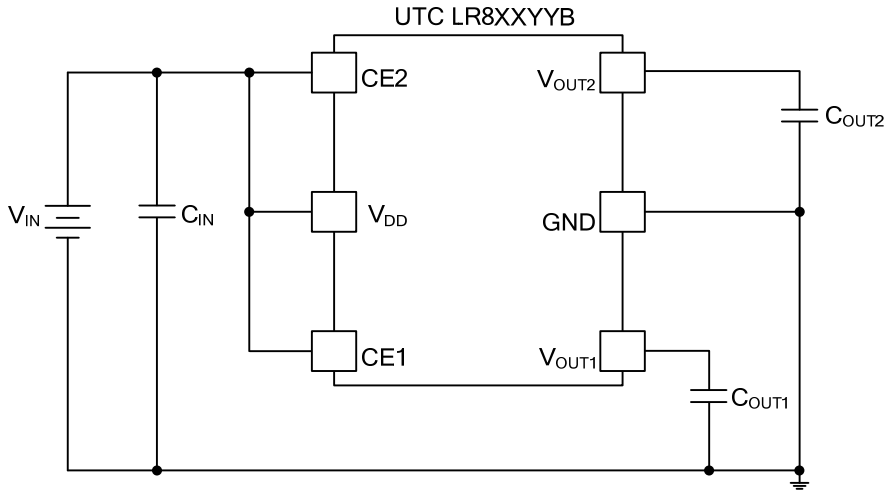

C_{IN}=C_{OUT1}=C_{OUT2}=Ceramic 0.22μF