LOW NOISE 150mA LDO REGULATOR

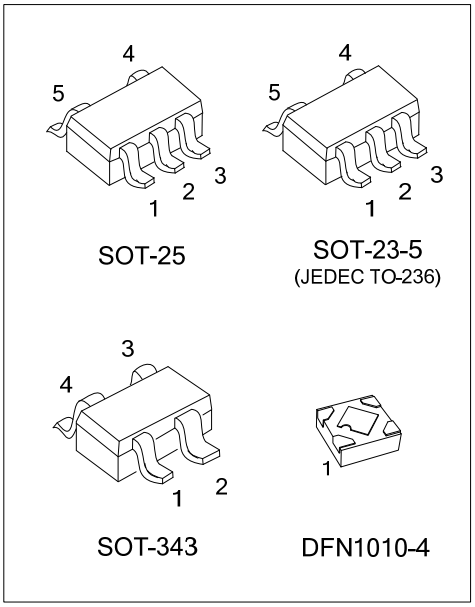

■ DESCRIPTION

The UTC **LR9103** is a typical LDO (linear regulator) with the features of high output voltage accuracy, low supply current, low ON-resistance, and high ripple rejection.

During operation of the UTC **LR9103**, the dropout voltage is very low and the response of line transient and load transient are very well.

Internally, there're many functions of UTC **LR9103** which can be seen in the block figure. There are a voltage reference unit, an error amplifier, resistor-net for voltage setting, a current limit circuit, and a chip enable circuit in each UTC **LR9103**.

The UTC **LR9103** can be used as an ideal of the power supply for hand-held communication equipment, such as: power source for portable communication equipment, power source for electrical appliances, for example, cameras, VCRs and camcorders and power source for battery-powered equipment.

■ FEATURES

* Ultra Supply Current: 42μA (Typ.)
* Standby Mode: 0.1μA (Typ.)
* Very Low Dropout Voltage: 0.13V (Typ.) @ I_{OUT} =150mA, V_{OUT} =2.85V
* Ripple Rejection: 65dB (Typ.) @ f=1kHz,V_{OUT}=2.85V
* Temperature-Drift Coefficient of Output Voltage: ±50ppm/°C (Typ.)
* Well Line Regulation: 0.05%/V (Typ.)
* *Output Voltage Accuracy: ±1.0%
* Internal Fold Back Protection Circuit: 50mA (Typ.) (Current at short mode)
*C_{IN}=C_{OUT}=1.0μF or more (Ceramic capacitors) are recommended to be used with this IC

■ ORDERING INFORMATION

Ordering Number		Package	Packing
Lead Free	Halogen Free		
LR9103L-xx-AE5-R	LR9103G-xx-AE5-R	SOT-23-5	Tape Reel
LR9103L-xx-AF5-R	LR9103G-xx-AF5-R	SOT-25	Tape Reel
LR9103L-xx-AL4-R	LR9103G-xx-AL4-R	SOT-343	Tape Reel
LR9103L-xx-K04-1010-R	LR9103G-xx-K04-1010-R	DFN1010-4	Tape Reel

Note: xx: Output Voltage, refer to Marking Information.

LR9103G-xx-AE5-R
- (1)Packing Type
- (2)Package Type
- (3)Output Voltage Code
- (4)Green Package

(1) R: Tape Reel
(2) AE5: SOT-23-5, AF5: SOT-25, AL4: SOT-343
K04-1010: DFN1010-4
(3) xx: refer to Marking Information
(4) G: Halogen Free and Lead Free, L: Lead Free

■ MARKING

PACKAGE	VOLTAGE CODE	MARKING
SOT-23-5 SOT-25	11: 1.1V 12: 1.2V 15: 1.5V 18: 1.8V 22: 2.2V 25: 2.5V 28: 2.8V 30: 3.0V 33: 3.3V	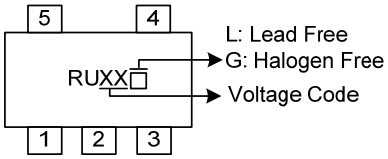
SOT-343		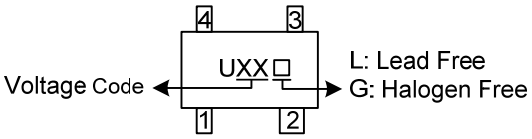
DFN1010-4	A: 1.1V B: 1.2V C: 1.5V D: 1.8V M: 2.2V E: 2.5V G: 2.8V J: 3.0V K: 3.3V	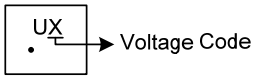

■ PIN CONFIGURATION

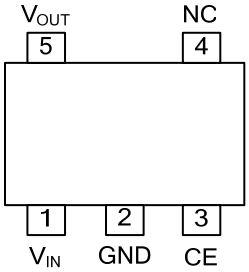

SOT-23-5

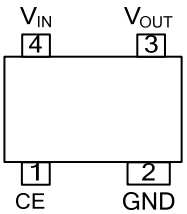

SOT-343

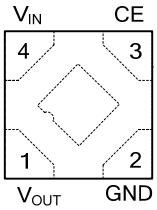

DFN1010-4
(TOP VIEW)

■ PIN DESCRIPTION

PIN NO.			PIN NAME	DESCRIPTION
SOT-23-5 SOT-25	SOT-343	DFN1010-4		
1	4	4	V_{IN}	Input Pin
2	2	2	GND	Ground Pin
3	1	3	CE	Chip Enable Pin. Active when this Pin is high.
4	-	-	NC	No Connection
5	3	1	V_{OUT}	Output Pin

■ BLOCK DIAGRAM

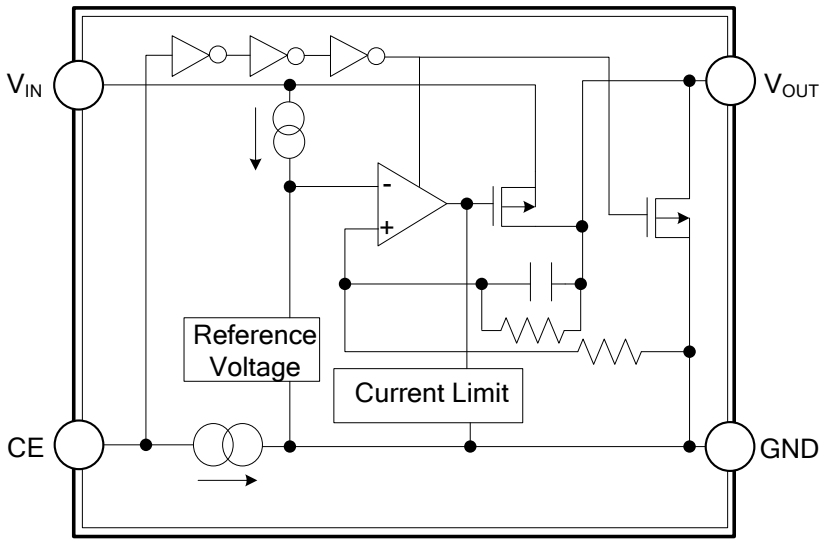

■ ABSOLUTE MAXIMUM RATING

PARAMETER		SYMBOL	RATINGS	UNIT
Input Voltage		V_{IN}	6	V
Input Voltage (CE Pin)		V_{CE}	6	V
Output Voltage		V_{OUT}	-0.3 ~ V_{IN}+0.3	V
Output Current		I_{OUT}	200	mA
Power Dissipation	SOT-23-5 SOT-25	P_D	380	mW
	SOT-343		250	mW
	DFN1010-4		60	mW
Junction Temperature		T_J	+125	°C
Operating Temperature		T_{OPR}	-40 ~ +85	°C
Storage Temperature		T_{STG}	-55 ~ +125	°C

Note: Absolute maximum ratings are those values beyond which the device could be permanently damaged.
Absolute maximum ratings are stress ratings only and functional device operation is not implied.

■ ELECTRICAL CHARACTERISTICS

(T_A=25°C, V_{IN}=Set V_{OUT}+1V, I_{OUT}=1mA, C_I=C_O=1.0μF, unless otherwise specified)

PARAMETER		SYMBOL	TEST CONDITIONS		MIN	TYP	MAX	UNIT
Output Voltage		V_{OUT}	V_{IN} = Set V_{OUT}+1V	V_{OUT} > 2.0V	×0.99		×1.01	V
				V_{OUT} ≤ 2.0V	-20		+20	mV
Input Voltage		V_{IN}					6	V
Load Regulation		ΔV_{OUT}	1mA≤I_{OUT}≤150mA			20	40	mV
Output Current		I_{OUT}			150			mA
Supply Current		I_{SS}	I_{OUT}=0A			42	60	μA
Supply Current (Standby)		I_{ST-BY}	V_{CE}=0V			0.1	2	μA
Short Current Limit		I_{LIMIT}	V_{OUT}=0V			50		mA
CE Pull-down Current		I_{PD}				0.3		μA
CE Input Voltage	High	V_{CEH}			1.2			V
	Low	V_{CEL}					0.3	V
Output Noise		eN	B_W=10Hz to 100kHz, I_{OUT}=30mA			30		μVrms
Ripple Rejection		RR	f=1kHz, Ripple 0.2V_{P-P} V_{IN}=Set V_{OUT}+1V, I_{OUT}=30mA (In case that V_{OUT}=2.0V, V_{IN}=3V)			65		dB
Dropout Voltage		V_D	I_{OUT}=150mA	1.1V≤V_{OUT}<1.5V		0.40		V
				1.5V≤V_{OUT}<1.7V		0.24		
				1.7V≤V_{OUT}<2.0V		0.21		
				2.0V≤V_{OUT}<2.5V		0.17		
				2.5V≤V_{OUT}<2.8V		0.14		
				2.8V≤V_{OUT}≤5.0V		0.13		
Line Regulation		$\frac{\Delta V_{OUT}}{\Delta V_{IN}}$	1.1V≤V_{OUT}≤4.0V, V_{SET}+0.5V≤V_{IN}≤5V			0.05		%/V
			4.0V<V_{OUT}≤5.0V, V_{SET}+0.5V≤V_{IN}≤6.5V					
Output Voltage Temperature Coefficient		$\frac{\Delta V_{OUT}}{\Delta T}$	-40°C≤T_{OPR}≤85°C			±50		ppm/°C
Low Output Nch Tr. ON Resistance		R_{LOW}	V_{IN}=4.0,V_{CE}=0V			70		Ω

■ TEST CIRCUIT

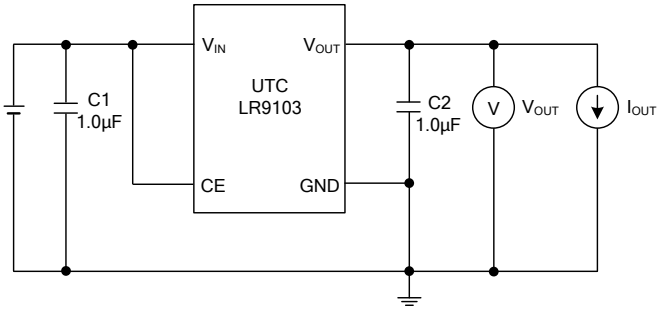

Basic Test Circuit

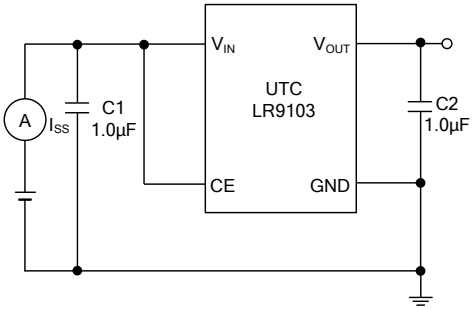

Test Circuit for Supply Current

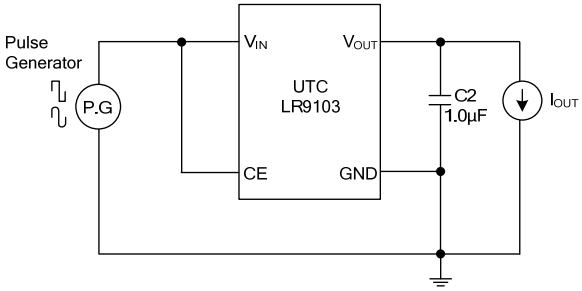

Test Circuit for Ripple Rejection

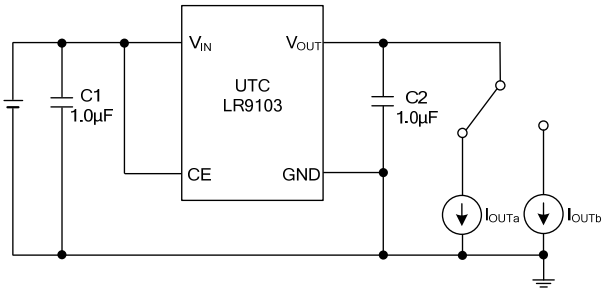

Test Circuit for Load Transient Response

■ TYPICAL APPLICATION CIRCUIT