600mA LOW DROPOUT LINEAR REGULATOR

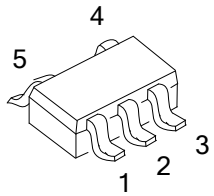

SOT-25

■ DESCRIPTION

The UTC **LR9211** is a high speed LDO regulator that features high accurate, low noise, high ripple rejection, low dropout and low power consumption. Designed with a P-channel MOSFET series pass transistor, the UTC **LR9211** yields extremely low dropout voltage and maintains very low ground current (70μA).

The UTC **LR9211** does not require a bypass capacitor, hence achieving the smallest PCB area.

Other features include foldback overcurrent protection, quick soft start, and overtemperature protection. The UTC **LR9211** is available in fixed output voltage from 0.8V to 3.3V with 0.1V per step or as an adjustable device with a 0.8V reference voltage The device comes in various packages.

■ FEATURES

* Wide Input Voltage Range from 2.5V to 5.5V
* Ultra Low Dropout Voltage: 200mV @ V_{OUT} =3.3V, 300mA
* Ultra Fast Response in Line/Load Transient
* Stable with 1uF Ceramic Output Capacitor
* Low Ground Current: 70μA Typical
* Low Shutdown Current: < 1μA
* Foldback Output Current Limit
* High Output Accuracy
  1.5% Initial Accuracy
  Fixed Output Voltages: 0.8V~3.3V
  Adjustable Output Voltage from 0.8V to 4.5V
* Over-Temperature Protection

■ ORDERING INFORMATION

Ordering Number		Package	Packing
Lead Free	Halogen Free		
LR9211L-xx-AF5-R	LR9211G-xx-AF5-R	SOT-25	Tape Reel

Note: xx: Output Voltage, refer to Marking Information.

LR9211G-xx-AF5-R (1)Packing Type (2)Package Type (3)Output Voltage Code (4)Green Package	(1) R: Tape Reel (2) AF5: SOT-25 (3) xx: refer to Marking Information (4) G: Halogen Free and Lead Free, L: Lead Free

■ MARKING

PACKAGE	VOLTAGE CODE	MARKING
SOT-25	18: 1.8V 33: 3.3V AD: ADJ	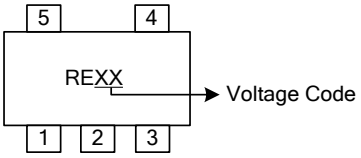

■ PIN CONFIGURATION

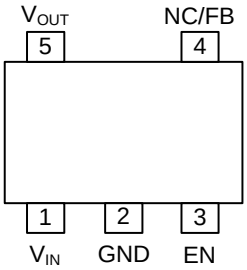

■ PIN DESCRIPTION

PIN NO.	PIN NAME	DESCRIPTION
1	V_{IN}	Input Voltage. This pin connects to the source of the internal pass transistor that supplies current to the output pin. Bypass VIN to GND with a minimum 1uF ceramic capacitor. Place the decoupling capacitor physically as close as possible to the device.
2	GND	Ground.
3	EN	Enable Input. Pulling this pin below 0.35V turns the regulator off, reducing the quiescent current to a fraction of its operating value. This pin is not available for 3-pin packages.
4	FB/NC	Feedback Pin(ADJ Version). this pin is connected to an external resistor divider, turns to adjustable output voltage; V_{OUT}=0.8*(R1+R2)/R1(V); NC Pin(fixed version);
5	V_{OUT}	Output Voltage. This pin is power output of the device. A pull low resistance exists when the device is disabled by pulling low the EN pin. To maintain adequate transient response to large load change, a minimum 1uF ceramic capacitor is required to reduce the effects of current transients on VOUT.

■ BLOCK DIAGRAM

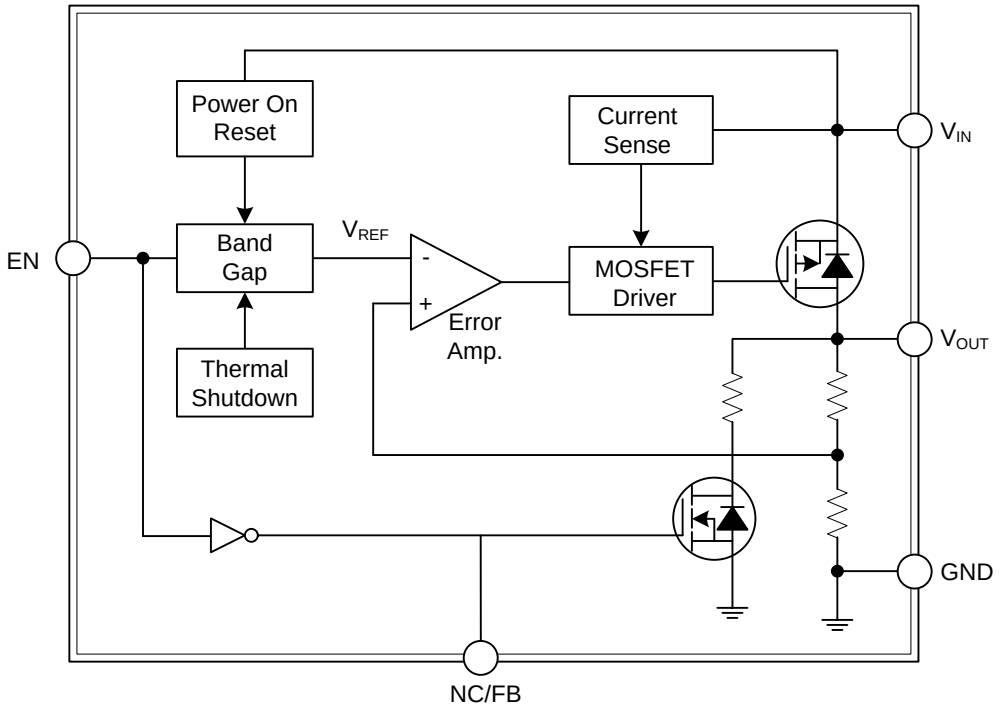

■ ABSOLUTE MAXIMUM RATING

PARAMETER	SYMBOL	RATINGS	UNIT
Supply Input Voltage (Note 1)	V_{IN}	-0.3 ~ +6	V
Other Pins		-0.3 ~ (V_{IN}+0.3)	V
Power Dissipation (T_A=25°C)	P_D	0.4	W
Junction Temperature	T_J	+150	°C
Storage Temperature Range	T_{STG}	-65 ~ +150	°C

Note: Absolute maximum ratings are those values beyond which the device could be permanently damaged. Absolute maximum ratings are stress ratings only and functional device operation is not implied.

■ THERMAL DATA

PARAMETER	SYMBOL	RATINGS	UNIT
Package Thermal Resistance	θ_{JA}	250	°C/W

■ RECOMMENDED OPERATION CONDITIONS

PARAMETER	SYMBOL	RATINGS	UNIT
Supply Input Voltage	V_{IN}	2.5 ~ +5.5	V
Operating Ambient Temperature Range	T_A	-20 ~ +85	°C
Operating Junction Temperature Range	T_J	-20 ~ +125	°C

■ ELECTRICAL CHARACTERISTICS (T_A=25°C, unless otherwise specified)

PARAMETER	SYMBOL	TEST CONDITIONS	MIN	TYP	MAX	UNIT
Supply Input Voltage						
Supply Input Voltage	V_{IN}		2.5		5.5	V
Quiescent Current	I_Q	V_{EN}=5V, I_{OUT}=0mA	40	70	115	μA
Shutdown Current	I_{SHDN}	V_{EN}=0V		0.1	1	μA
Output Voltage						
Output Voltage Accuracy	V_{OUT}	V_{IN}=V_{NOM}+1.0V, I_{OUT}=1mA, fixed output voltage version	-1.5		1.5	%V_{NOM}
Reference Voltage Accuracy	V_{FB}	V_{IN}=3.3V, I_{OUT}=1mA, Vout=FB ADJ output voltage version	0.788	0.80	0.812	V
Output Line Regulation	$\Delta V_{REF\ (LINE)}$	2.5V<V_{IN}<5.5V, and V_{IN}>V_{OUT}+1.0V, I_{OUT}=1mA		0.01	0.2	%/V
Output Load Regulation	$\Delta V_{REF\ (LOAD)}$	1mA<I_{OUT}<500mA, V_{IN}=V_{NOM}+1.0V		0.5	2.0	%/A
Dropout Voltage	V_{DROP}	I_{OUT}=300mA, V_{OUT} =1.8V		350	600	mV
		I_{OUT}=300mA, V_{OUT} =3.3V		200	400	
		I_{OUT}=600mA, V_{OUT} =1.8V			1200	
		I_{OUT}=600mA, V_{OUT} =3.3V			800	
Power Supply Rejection Ratio	PSRR	Frequency=10Hz, I_{OUT}=10mA		68		dB
		Frequency=1kHz, I_{OUT}=10mA		65		
		Frequency=100kHz, I_{OUT}=10mA		45		
		Frequency=10Hz, I_{OUT}=300mA		48		
		Frequency=1kHz, I_{OUT}=300mA		62		
		Frequency=100kHz, I_{OUT}=300mA		40		
Enable						
Enable High Level	V_{EN}		1.2			V
Disable Low Level	V_{SD}				0.35	V
EN Input Current	I_{EN}	V_{IN}=5.5V, V_{EN}=5.5V or 0V	-1		1	μA
Enable Delay Time	T_{DELAY}	from V_{EN}>1.2V to V_{OUT}>10%V_{NOM}, by design		35		us
Output Ramp Up Time	T_{SS}	from V_{OUT}=10% to 90% of V_{NOM}, by design		45		us
Protection						
Current Limit Threshold	I_{LIM}		0.9	1.2		A
Short Circuit Current			0.6			A
Thermal Shutdown Temperature	T_{SD}	I_{OUT}=0mA, V_{IN}=V_{EN}=5.5V		170		°C
Thermal Shutdown Hysteresis	T_{SDHYS}	I_{OUT}=0mA, V_{IN}=V_{EN}=5.5V		10		°C

■ TYPICAL APPLICATION CIRCUIT