150mA LDO REGULATOR

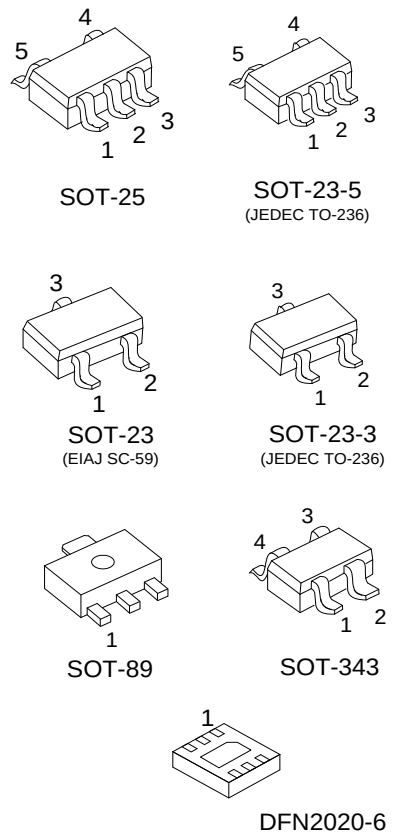

■ DESCRIPTION

The UTC **LR9280** is a typical LDO (linear regulator) with the features of high output voltage accuracy, low supply current, low ON-resistance. Internally, there're many functions of UTC **LR9280** which can be seen in the block figure. There are a voltage reference unit, an error amplifier, resistor-net for voltage setting, a current limit circuit, and a chip enable circuit in each UTC **LR9280**.

The output voltage of these ICs is fixed with high accuracy. B version has a chip enable pin, therefore low consumption current standby mode can be realized with the pin.

■ FEATURES

* Output voltage accuracy (±2.0%)
* Output voltage Range (1.2V~4.0V)
* Dropout voltage (TYP=0.25V)(I_{OUT}=150mA 3.0V Output type)
* Line regulation (TYP=0.05%/V)
* Temperature-Drift Coefficient of Output Voltage (TYP=±100ppm/°C)
* Ceramic capacitors are recommended to be used with this IC (1μF)

■ ORDERING INFORMATION

Ordering Number		Package	Packing
Lead Free	Halogen Free		
LR9280CL-xx-AB3-x-R	LR9280CG-xx-AB3-x-R	SOT-89	Tape Reel
LR9280CL-xx-AE2-R	LR9280CG-xx-AE2-R	SOT-23-3	Tape Reel
LR9280CL-xx-AE3-R	LR9280CG-xx-AE3-R	SOT-23	Tape Reel
LR9280xL-xx-AE5-R	LR9280xG-xx-AE5-R	SOT-23-5	Tape Reel
LR9280xL-xx-AF5-R	LR9280xG-xx-AF5-R	SOT-25	Tape Reel
LR9280BL-xx-AL4-R	LR9280BG-xx-AL4-R	SOT-343	Tape Reel
LR9280BL-xx-K06-2020-R	LR9280BG-xx-K06-2020-R	DFN2020-6	Tape Reel

Note: xx: Output Voltage, refer to Marking Information.

LR9280CG-xx-AB3-x-R

(1)Packing Type
(2)Pin Code
(3)Package Type
(4)Output Voltage Code
(5)Green Package
(6)Discharge Function

(1) R: Tape Reel
(2) refer to Pin Assignment (for SOT-89)
(3) AB3: SOT-89, AE2: SOT-23-3, AE3: SOT-23, AE5: SOT-23-5, AF5: SOT-25, AL4: SOT-343 K06-2020: DFN2020-6
(4) xx: refer to Marking Information
(5) G: Halogen Free and Lead Free, L: Lead Free
(6) B: Active high type, C: WIthout chip enable circuit

■ MARKING INFORMATION

PACKAGE	VOLTAGE CODE	MARKING
SOT-89	12: 1.2V 15: 1.5V 18: 1.8V 22: 2.2V 25: 2.5V 28: 2.8V 30: 3.0V 33: 3.3V 36: 3.6V 40: 4.0V	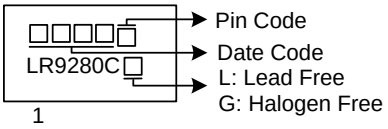
SOT-23-3 SOT-23		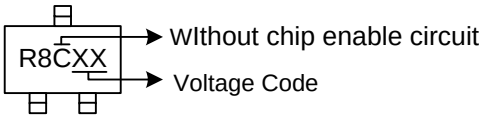
SOT-23-5 SOT-25		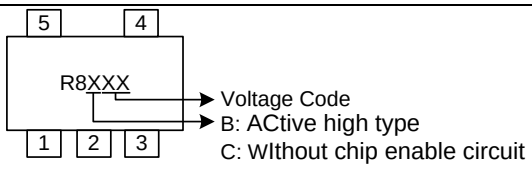
SOT-343		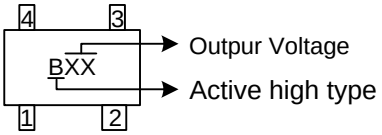
DFN2020-6		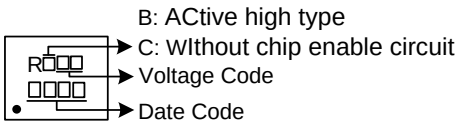

■ PIN CONFIGURATION

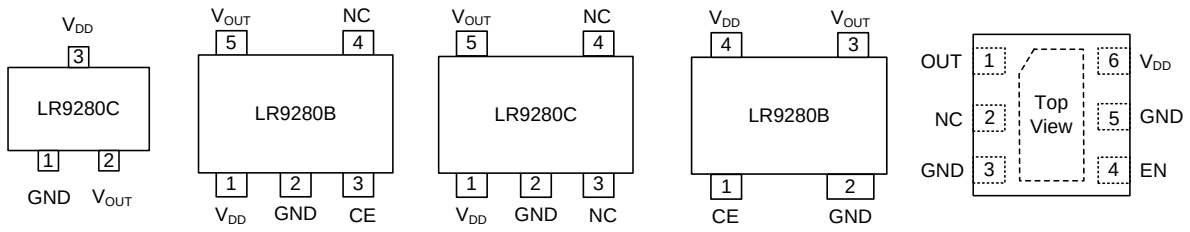

SOT-23-3
SOT-23

SOT-23-5/SOT-25

SOT-343

DFN2020-6

■ PIN DESCRIPTION

PIN NO.			PIN NAME	DESCRIPTION
SOT-23-3 SOT-23	SOT-89			
	B	C		
1	2	1	GND	Ground pin
2	1	3	V_{OUT}	Output pin
3	3	2	V_{DD}	Input pin

PIN NO.		PIN NAME	DESCRIPTION
SOT-23-5/SOT-25			
LR9280B	LR9280C		
1	1	V_{DD}	Input pin
2	2	GND	Ground pin
3	-	CE	Chip Enable Pin
4	3, 4	NC	No Connection
5	5	V_{OUT}	Output pin

PIN NO.		PIN NAME	DESCRIPTION
SOT-343	DFN2020-6		
1	4	CE	Chip Enable Pin
2	3, 5	GND	Ground pin
3	1	V_{OUT}	Output pin
4	6	V_{DD}	Input pin
-	2	NC	No Connection

■ BLOCK DIAGRAM

LR9280B-xx

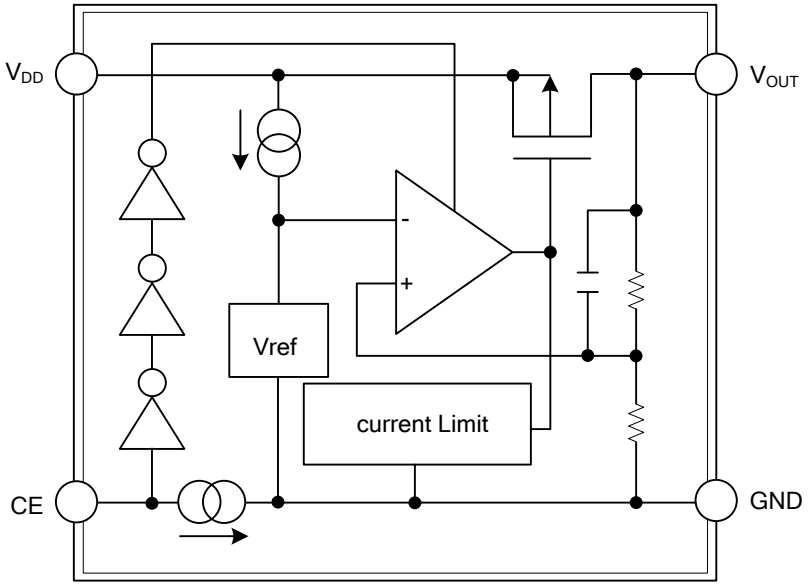

LR9280C-xx

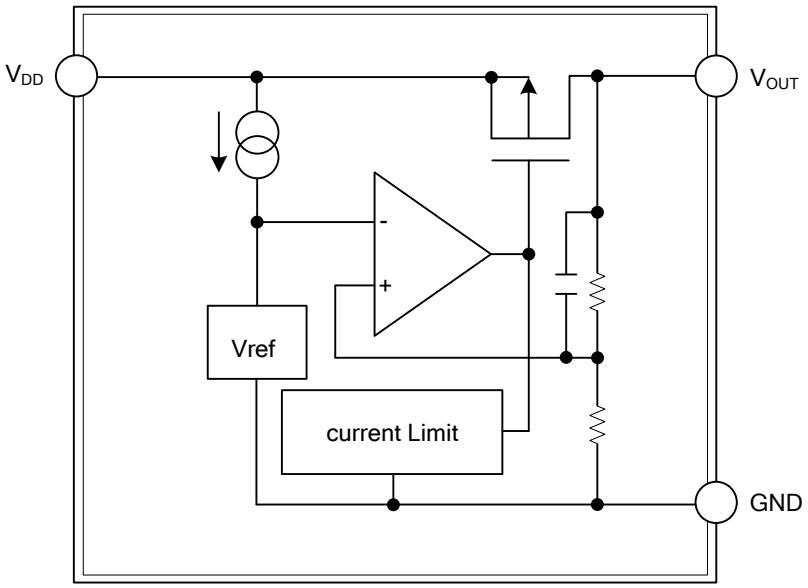

■ ABSOLUTE MAXIMUM RATING

PARAMETER		SYMBOL	RATINGS	UNIT
Input Voltage		V_{IN}	6.5	V
Input Voltage(CE Pin)		V_{CE}	6.5	V
Output Voltage		V_{OUT}	-0.3 ~ V_{IN}+0.3	V
Output Current		I_{OUT}	150	mA
Power Dissipation	SOT-23-3 SOT-23	P_D	300	mW
	SOT-23-5 SOT-25		380	mW
	SOT-89		500	mW
	SOT-343		250	mW
	DFN2020-6		460	mW
Operating Temperature		T_{OPR}	-40 ~ +85	°C
Storage Temperature		T_{STG}	-55 ~ +125	°C

Note: Absolute maximum ratings are those values beyond which the device could be permanently damaged. Absolute maximum ratings are stress ratings only and functional device operation is not implied.

■ ELECTRICAL CHARACTERISTICS (T_A=25°C, unless otherwise noted)

PARAMETER	SYMBOL	TEST CONDITIONS		MIN	TYP	MAX	UNIT
Output Voltage	V_{OUT}	V_{IN}=Set V_{OUT}+1V, 1μA ≤ I_{OUT}≤30mA		x0.980		x1.020	V
Dropout Voltage	V_{DIF}	I_{OUT}=150mA	1.2≤V_{OUT}<1.3		0.85	1.20	V
			1.3≤V_{OUT}<1.4		0.75	1.10	V
			1.4≤V_{OUT}<1.5		0.65	1.00	V
			1.5≤V_{OUT}<1.7		0.60	0.90	V
			1.7≤V_{OUT}<1.9		0.50	0.75	V
			1.9≤V_{OUT}<2.1		0.40	0.65	V
			2.1≤V_{OUT}<2.8		0.35	0.55	V
			2.8≤V_{OUT}≤3.6		0.25	0.40	V
			3.6≤V_{OUT}≤4.0		0.20	0.35	V
Input Voltage	V_{IN}					6.0	V
Supply Current	I_{SS}	V_{IN}-V_{OUT}=1.0V, I_{OUT}=0mA			0.7	1.5	μA
Standby Current	I_{STB}	V_{IN}−V_{OUT}=1.0V,V_{CE}=GND			0.1	1.0	μA
Load Regulation	$\Delta V_{OUT}/\Delta I_{OUT}$	V_{IN}−V_{OUT}=1.0V(V_{OUT} ≥ 1.5V) V_{IN}=2.4V(V_{OUT}<1.5V) 1μA ≤I_{OUT}≤150mA			20	40	mV
Line Regulation	$\Delta V_{OUT}/\Delta V_{IN}$	I_{OUT}=30mA V_{OUT}+0.5V≤V_{IN} ≤ 6.0V (V_{OUT}≥1.5V), 2.0V≤V_{IN}≤6.0V (1.2V≤V_{OUT}≤1.4V)			0.05	0.20	%/V
Output Voltage Temperature Coefficient	$\Delta V_{OUT}/\Delta T_{OPT}$	I_{OUT}=30mA, -40°C≤T_{OPT}≤85°C			±100		ppm/°C
Short Current Limit	I_{SC}	V_{OUT}=0V			50		mA
CE Pull-down Constant Current	I_{PD}	LR9280B			0.35		μA
CE Input Voltage “H”	V_{CEH}	LR9280B		1.2		6.0	V
CE Input Voltage “L”	V_{CEL}	LR9280B		0.0		0.3	V

■ TEST CIRCUITS

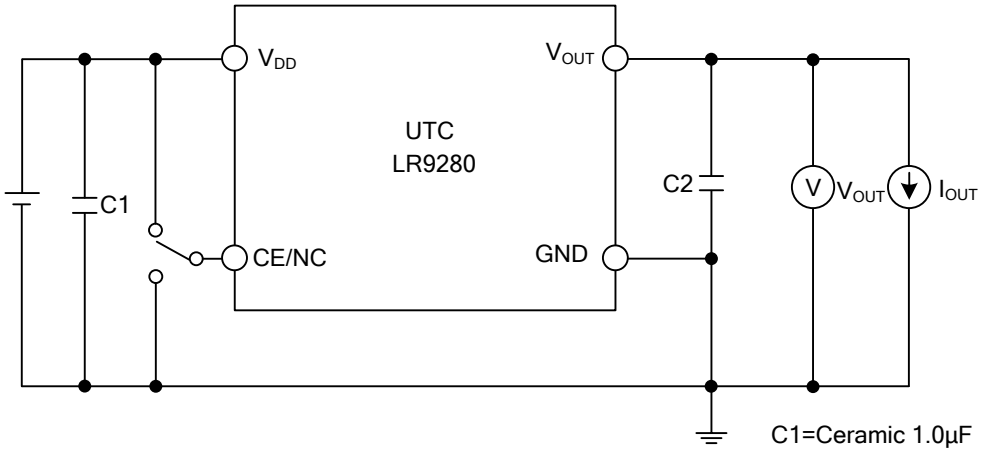

Standard test Circuit

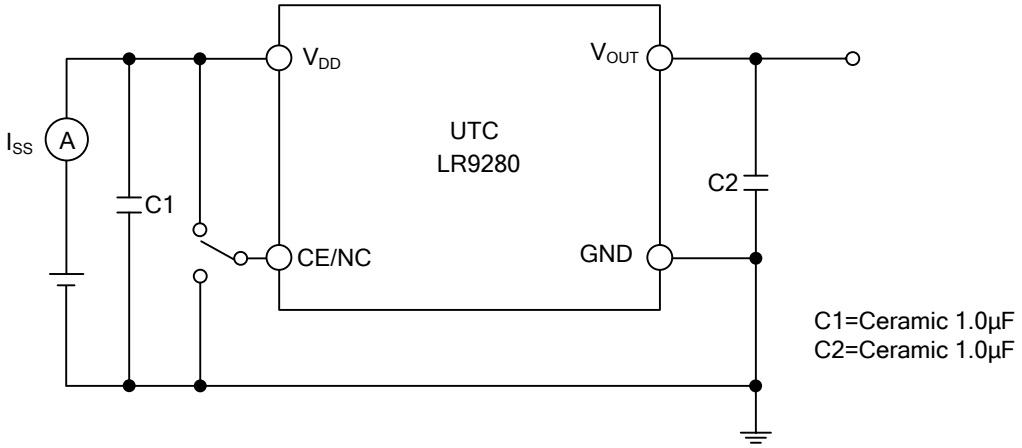

Supply Current Test Circuit

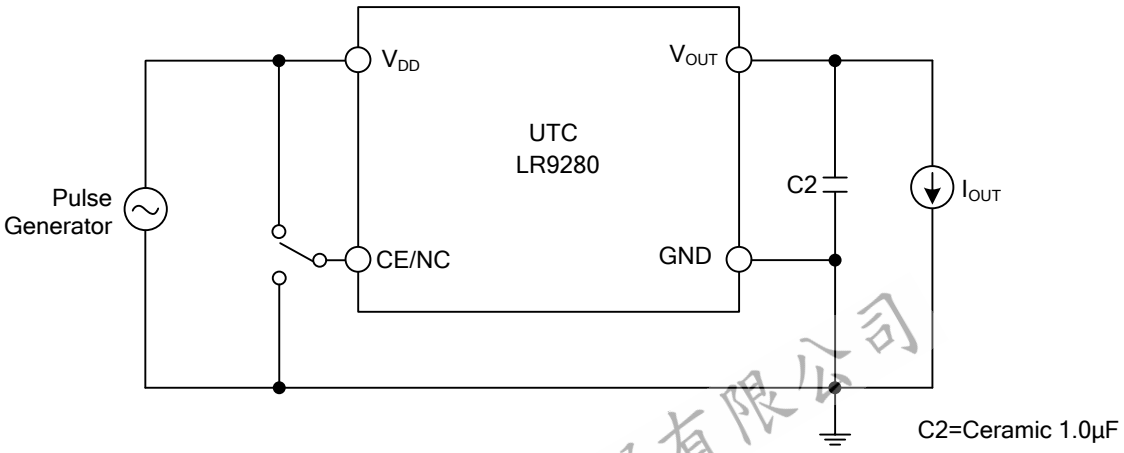

Ripple Rejection, Line Transient Response Test Circuit

■ TYPICAL APPLICATION CIRCUIT

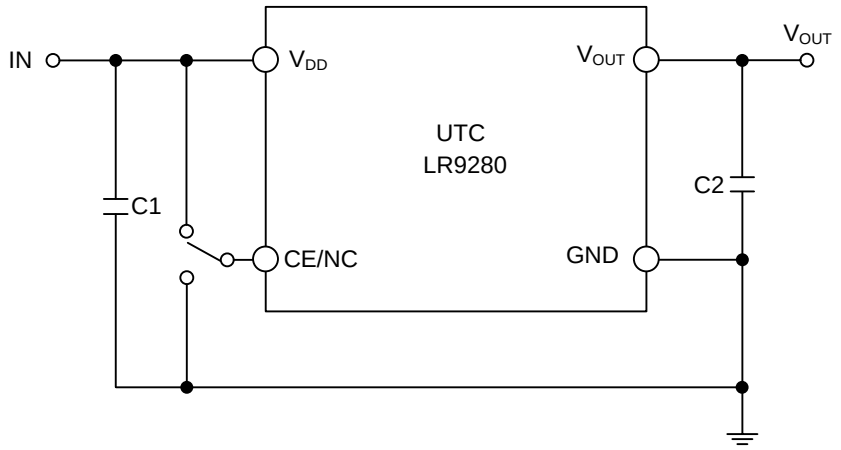

(External Components)
Output Capacitor
Ceramic Capacitor 1μF

■ TYPICAL CHARACTERISTICS