LR9282

CMOS IC

300mA LDO REGULATOR

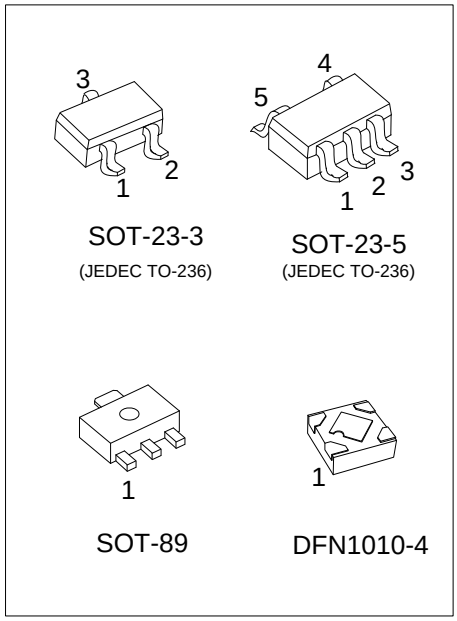

■ DESCRIPTION

The UTC **LR9282** is a typical LDO (linear regulator) with the features of high output voltage accuracy, low supply current, low ON-resistance. Internally, there're many functions of UTC **LR9282** which can be seen in the block figure. There are a voltage reference unit, an error amplifier, resistor-net for voltage setting, a current limit circuit, and a chip enable circuit in each UTC **LR9282**.

The output voltage of these ICs is fixed with high accuracy.

■ FEATURES

* Supply current (TYP=1μA)
* Output voltage accuracy (±1%)
* Output voltage range (1.2V~5V)
* Dropout voltage (TYP=200mV)(I_{OUT}=100mA, V_{OUT}=1.8V Output type)
* Line regulation (TYP=0.2%/V)
* Built-in fold-back protection circuit (TYP=15mA)
(Current at short mode)

■ ORDERING INFORMATION

Ordering Number		Package	Packing
Lead Free	Halogen Free		
LR9282L-xx-AB3-R	LR9282G-xx-AB3-R	SOT-89	Tape Reel
LR9282L-xx-AE2-R	LR9282G-xx-AE2-R	SOT-23-3	Tape Reel
LR9282L-xx-AE5-R	LR9282G-xx-AE5-R	SOT-23-5	Tape Reel
LR9282L-xx-K04-1010-R	LR9282G-xx-K04-1010-R	DFN1010-4	Tape Reel

Note: xx: Output Voltage, refer to Marking Information.

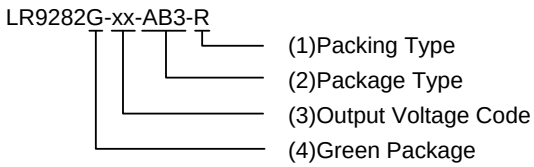

(1) R: Tape Reel
(2) AB3: SOT-89, AE2: SOT-23-3, AE5: SOT-23-5, K04-1010: DFN1010-4
(3) xx: refer to Marking Information
(4) G: Halogen Free and Lead Free, L: Lead Free

■ MARKING INFORMATION

PACKAGE	VOLTAGE CODE	MARKING
SOT-23-3	12: 1.2V 15: 1.5V 18: 1.8V 20: 2.0V 28: 2.8V 30: 3.0V 33: 3.3V 36: 3.6V 40: 4.0V	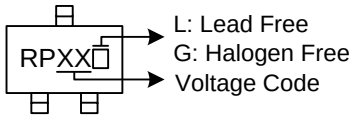
SOT-23-5		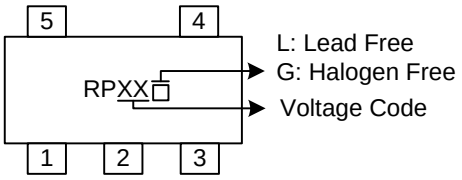
SOT-89		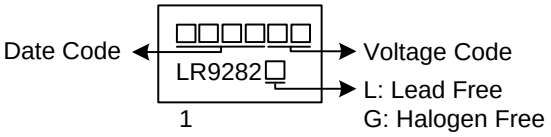
DFN1010-4	B: 1.2V C: 1.5V D: 1.8V F: 2.0V G: 2.8V J: 3.0V K: 3.3V H: 3.6V L: 4.0V	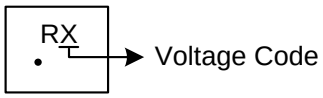

■ PIN CONFIGURATION

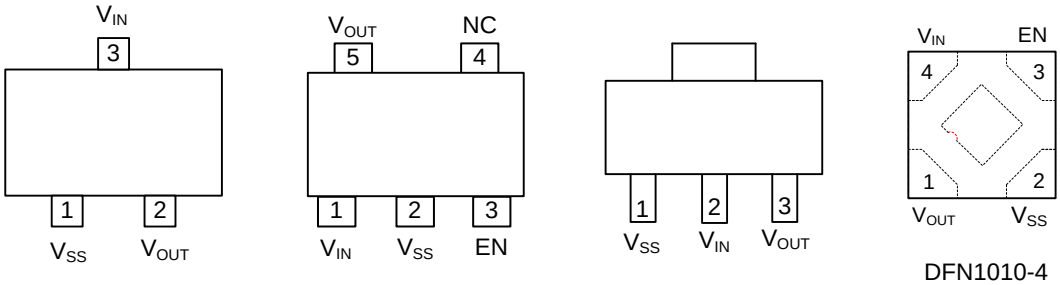

SOT-23-3 SOT-23-5 SOT-89 DFN1010-4 (TOP VIEW)

■ PIN DESCRIPTION

PIN NO.				PIN NAME	DESCRIPTION
SOT-23-3	SOT-23-5	SOT-89	DFN1010-4		
1	2	1	2	V_{SS}	Ground
2	5	3	1	V_{OUT}	Regulated output voltage.
3	1	2	4	V_{IN}	Positive power supply input voltage.
-	3	-	3	EN	Chip Enable
-	4	-	-	NC	

■ BLOCK DIAGRAM

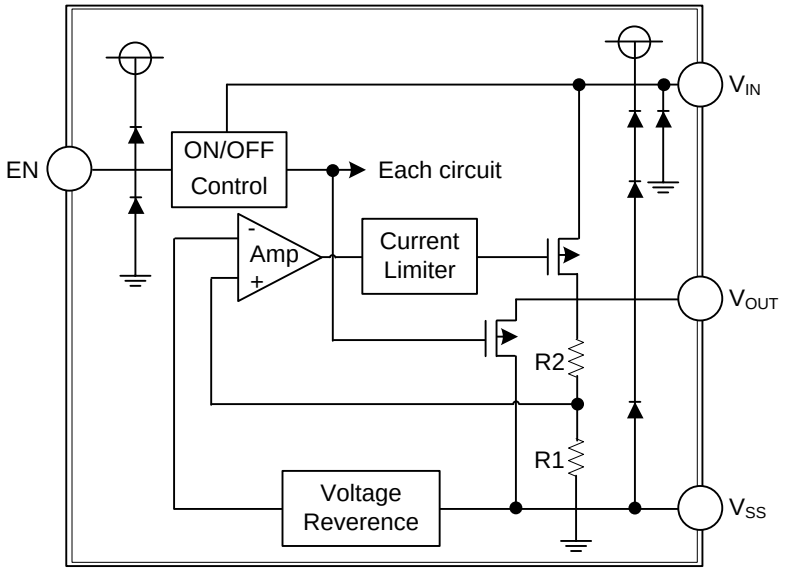

■ ABSOLUTE MAXIMUM RATING (T_A=25°C, unless otherwise specified)

PARAMETER		SYMBOL	RATINGS	UNIT
Input Voltage		V_{IN}	7	V
Output Current		I_{OUT}	300	mA
Power Dissipation	SOT-23-3	P_D	280	mW
	SOT-23-5		300	mW
	SOT-89		500	mW
	DFN1010-4		280	mW
Operating Temperature		T_{OPT}	-40 ~ +125	°C
Storage Temperature		T_{STG}	-40 ~ +125	°C

Note: Absolute maximum ratings are those values beyond which the device could be permanently damaged. Absolute maximum ratings are stress ratings only and functional device operation is not implied.

■ ELECTRICAL CHARACTERISTICS

(V_{IN}=V_{OUT}+1V,C_{IN}=C_{OUT} =1μF ,T_A=25°C, unless otherwise specified)

PARAMETER	SYMBOL	TEST CONDITIONS	MIN	TYP	MAX	UNIT
Input Voltage	V_{in}				6.5	V
DC Output Accuracy		I_{OUT}=1mA	-1		1	%
Dropout Voltage	V_{DIF}	I_{OUT}=100mA, V_{OUT}=1.8V		200		mV
Supply Current	I_{SS}	I_{OUT}=0mA		1.0	1.5	μA
Load Regulation	ΔV_{OUT}	1mA ≤I_{OUT}≤100mA		10		mV
Line Regulation	$\frac{\Delta V_{OUT}}{V_{OUT} \cdot \Delta V_{IN}}$	I_{OUT}=10mA V_{OUT}+1V≤V_{IN} ≤6.5V		0.2	0.35	%/V
Output Current Limit	I_{LIM}		300			mA
Short Current	I_{SC}	V_{OUT}=0V		15		mA
EN “High” Voltage	V_{EN} “H”		1.5		V_{IN}	V
EN “Low” Voltage	V_{EN} “L”				0.3	V

■ TYPICAL APPLICATION CIRCUIT