QUADRUPLE 2-LINE TO 1-LINE DATA SELECTORS/MULTIPLEXERS

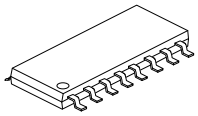

SOP-16

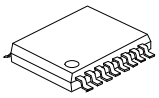

TSSOP-16

■ DESCRIPTION

The **U74LVC157** is designed for 1.65V to 3.6V V_{CC} operation.

The device features a common strobe ($\overline{G}$) input. When ($\overline{G}$) is high, all outputs are low. When $\overline{G}$ is low, a 4-bit word is selected from one of two sources and is routed to the four outputs.

■ FEATURES

* Operate From 1.65V to 3.6V
* Inputs Accept Voltages to 5.5V
* Max t_{pd} of 5.0ns at 3.3V
* Typical V_{OLP} (Output Ground Bounce)<0.8V at V_{CC}=3.3V, T_A=25°C
* Typical V_{OHV} (Output V_{OH} Undershoot)>2V at V_{CC}=3.3V, T_A=25°C

■ ORDERING INFORMATION

Ordering Number		Package	Packing
Lead Free	Halogen Free		
U74LVC157L-S16-R	U74LVC157G-S16-R	SOP-16	Tape Reel
U74LVC157L-P16-R	U74LVC157G-P16-R	TSSOP-16	Tape Reel

U74LVC157G-S16-R (1)Packing Type (2)Package Type (3)Green Package	(1) R: Tape Reel (2) S16: SOP-16, P16: TSSOP-16 (3) G: Halogen Free and Lead Free, L: Lead Free

■ MARKING

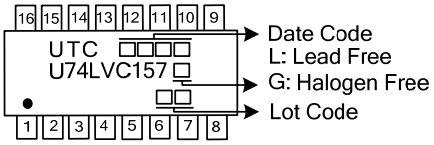

■ PIN CONFIGURATION

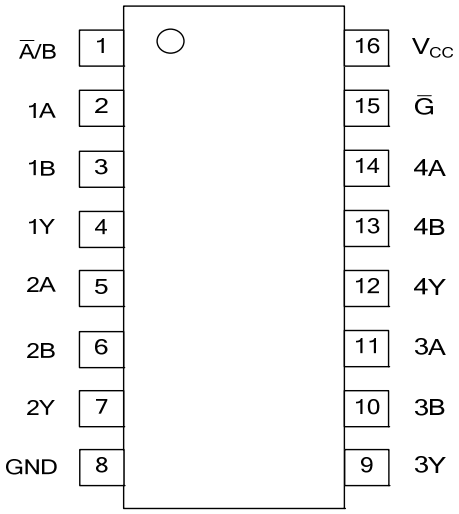

■ FUNCTION TABLE

INPUTS				OUTPUT Y
$\overline{G}$	$\overline{A}$ / B	A	B	
H	X	X	X	L
L	L	L	X	L
L	L	H	X	H
L	H	X	L	L
L	H	X	H	H

Note: H: HIGH voltage level; L: LOW voltage level; X: Don't care.

■ LOGIC DIAGRAM (positive logic)

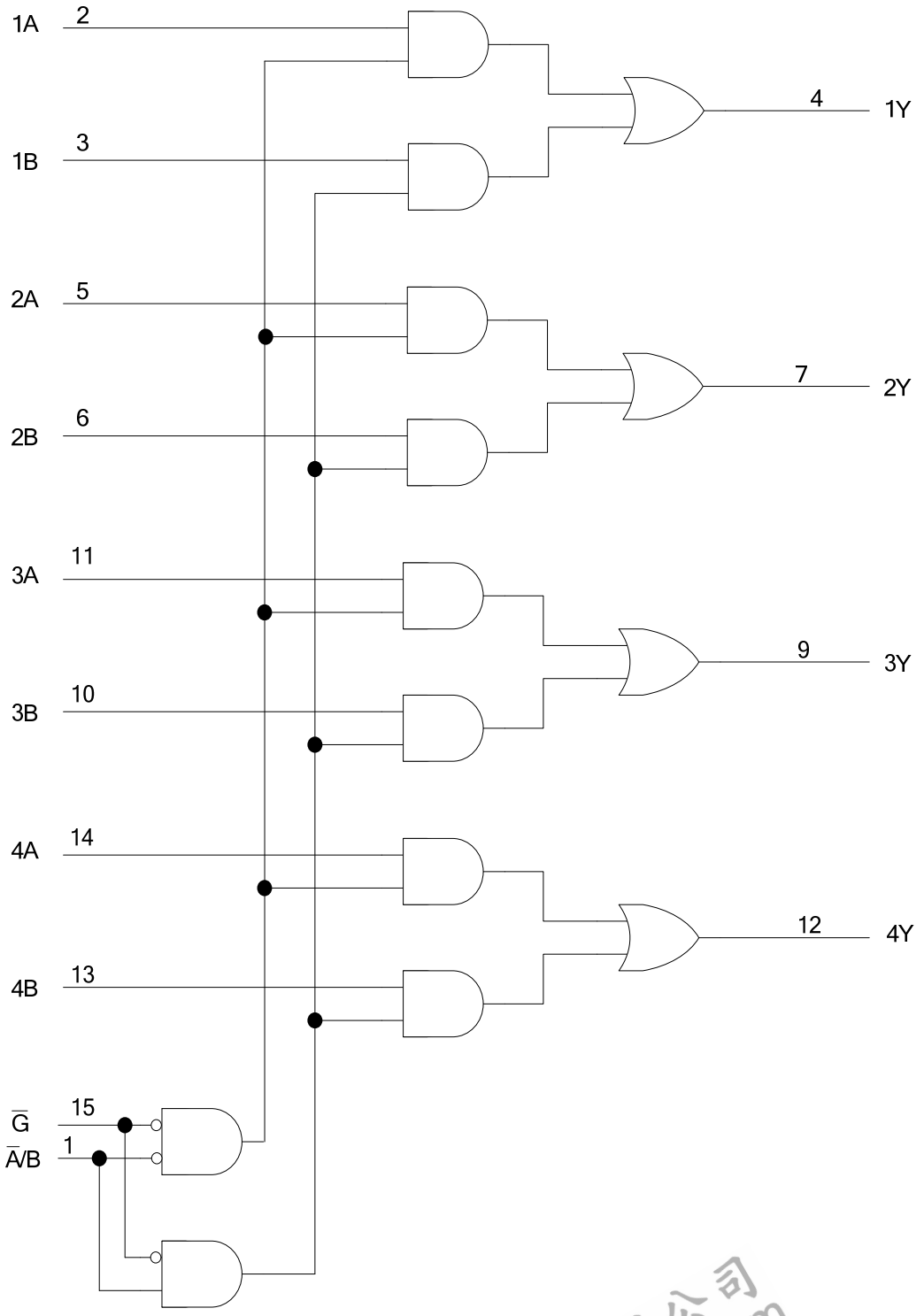

■ ABSOLUTE MAXIMUM RATING

PARAMETER	SYMBOL	CONDITIONS	RATINGS	UNIT
Supply Voltage	V_{CC}		-0.5 ~ +6.5	V
Input Voltage	V_{IN}		-0.5 ~ +6.5	V
Output Voltage	V_{OUT}	Output in the high or low state	-0.5 ~ V_{CC} +0.5	V
		Output in the power-off state	-0.5 ~ +6.5	V
Continuous V_{CC} or GND Current	I_{CC}		±100	mA
Continuous Output Current	I_{OUT}	V_{OUT}=0V ~ V_{CC}	±50	mA
Input Clamp Current	I_{IK}	V_{IN}<0V	-50	mA
Output Clamp Current	I_{OK}	V_{OUT}>V_{CC} or V_{OUT}<0V	-50	mA
Storage Temperature Range	T_{STG}		-65 ~ +150	°C

Note: Absolute maximum ratings are those values beyond which the device could be permanently damaged. Absolute maximum ratings are stress ratings only and functional device operation is not implied.

■ RECOMMENDED OPERATING CONDITIONS (T_A =25°C , unless otherwise specified)

PARAMETER	SYMBOL	TEST CONDITIONS	MIN	TYP	MAX	UNIT
Supply Voltage	V_{CC}	Operating	1.65		3.6	V
Input Voltage	V_{IN}		0		5.5	V
Output Voltage	V_{OUT}		0		V_{CC}	V
High-level input voltage	V_{IH}	V_{CC}=1.65V~1.95V	0.65×V_{CC}			V
		V_{CC}=2.3V~2.7V	1.7			
		V_{CC}=2.7V~3.6V	2			
Low-level input voltage	V_{IL}	V_{CC}=1.65V~1.95V			0.35×V_{CC}	V
		V_{CC}=2.3V~2.7V			0.7	
		V_{CC}=2.7V~3.6V			0.8	
Input Transition Rise or Fall Rate	Δt/Δv				10	ns/V
Operating Temperature	T_A		-40		85	°C

Note: All unused inputs of the device must be held at V_{CC} or GND to ensure proper device operation.

■ ELECTRICAL CHARACTERISTICS (T_A =25°C , unless otherwise specified)

PARAMETER	SYMBOL	TEST CONDITIONS	MIN	TYP	MAX	UNIT
High-Level Output Voltage	V_{OH}	V_{CC}=1.65~3.6V, I_{OH}=-100μA	V_{CC}-0.2			V
		V_{CC}=1.65V, I_{OH}=-4mA	1.29			
		V_{CC}=2.3V, I_{OH}=-8mA	1.9			
		V_{CC}=2.7V, I_{OH}=-12mA	2.2			
		V_{CC}=3.0V, I_{OH}=-12mA	2.4			
		V_{CC}=3V, I_{OH}=-24mA	2.3			
Low-Level Output Voltage	V_{OL}	V_{CC}=1.6 ~3.6V, I_{OL}=100μA			0.1	V
		V_{CC}=1.65V, I_{OL}=4mA			0.24	
		V_{CC}=2.3V, I_{OL}=8mA			0.30	
		V_{CC}=2.7V, I_{OL}=12mA			0.40	
		V_{CC}=3V, I_{OL}=24mA			0.55	

■ ELECTRICAL CHARACTERISTICS (Cont.)

PARAMETER	SYMBOL	TEST CONDITIONS	MIN	TYP	MAX	UNIT
Input Leakage Current	$I_{I(LEAK)}$	V_{CC}=3.6V, V_{IN}=5.5V or GND			±1	μA
Power OFF Leakage Current	I_{OFF}	V_{CC}=0V, V_{IN} or V_{OUT}=5.5V			±10	μA
Quiescent Supply Current	I_{CC}	V_{IN}=V_{CC} or GND, I_{OUT}=0 V_{CC}=3.6V			1	μA
Additional Quiescent Supply Current Per Input Pin	ΔI_{CC}	V_{CC}=2.7V~3.6V, One input at V_{CC}-0.6V, Other inputs at V_{CC} or GND			500	μA
Input Capacitance	C_I	V_{CC}=3.3V, V_{IN}=V_{CC} or GND		5		pF

■ SWITCHING CHARACTERISTICS (T_A =25°C , unless otherwise specified)(see Figure 1)

PARAMETER	SYMBOL	TEST CONDITIONS	MIN	TYP	MAX	UNIT
Propagation delay from input (A or B) to output(Y)	t_{PLH}/t_{PHL}	V_{CC}=1.8V±0.15V, C_L=30pF	1	5.5	13.5	ns
		V_{CC}=2.5V±0.2V, C_L=30pF	1	3.2	7.4	ns
		V_{CC}=2.7V, C_L=50pF	1	3.6	5.7	ns
		V_{CC}=3.3V±0.3V, C_L=50pF	1	3	5	ns
Propagation delay from input ($\overline{A}$ / B) to output(Y)	t_{PLH}/t_{PHL}	V_{CC}=1.8V±0.15V, C_L=30pF	1	6	15.5	ns
		V_{CC}=2.5V±0.2V, C_L=30pF	1	3.7	9.6	ns
		V_{CC}=2.7V, C_L=50pF	1	4.1	7.9	ns
		V_{CC}=3.3V±0.3V, C_L=50pF	1	3.4	6.6	ns
Propagation delay from input ($\overline{G}$) to output(Y)	t_{PLH}/t_{PHL}	V_{CC}=1.8V±0.15V, C_L=30pF	1	5.9	13.5	ns
		V_{CC}=2.5V±0.2V, C_L=30pF	1	3.5	9.3	ns
		V_{CC}=2.7V, C_L=50pF	1	3.9	7.6	ns
		V_{CC}=3.3V±0.3V, C_L=50pF	1	3.3	6.3	ns

■ OPERATING CHARACTERISTICS (f=10MHz, T_A =25°C , unless otherwise specified)

PARAMETER	SYMBOL	TEST CONDITIONS	MIN	TYP	MAX	UNIT
Power Dissipation Capacitance	C_{PD}	V_{CC}=1.8V		14		pF
		V_{CC}=2.5V		15		pF
		V_{CC}=3.3V		16		pF

■ TEST CIRCUIT AND WAVEFORMS

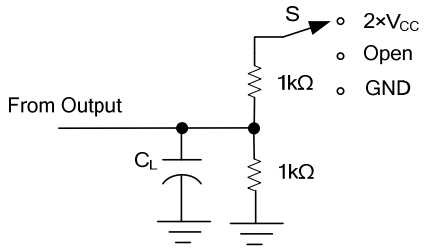

TEST CIRCUIT

TEST	S
t_{PLH}/t_{PHL}	Open
t_{PHZ}/t_{PZH}	GND
t_{PLZ}/t_{PZL}	2×V_{CC}

V_{CC}	INPUTS		V_M	V_{LOAD}	C_L	R_L	V△
	V_{IN}	t_R/t_F					
1.8V±0.15V	V_{CC}	≤2ns	Vcc/2	2×V_{CC}	30pF	1KΩ	0.15V
2.5V±0.2V	V_{CC}	≤2ns	Vcc/2	2×V_{CC}	30pF	500Ω	0.15V
2.7V	2.7V	≤2.5ns	1.5V	6V	50pF	500Ω	0.3V
3.3V±0.3V	2.7V	≤2.5ns	1.5V	6V	50pF	500Ω	0.3V

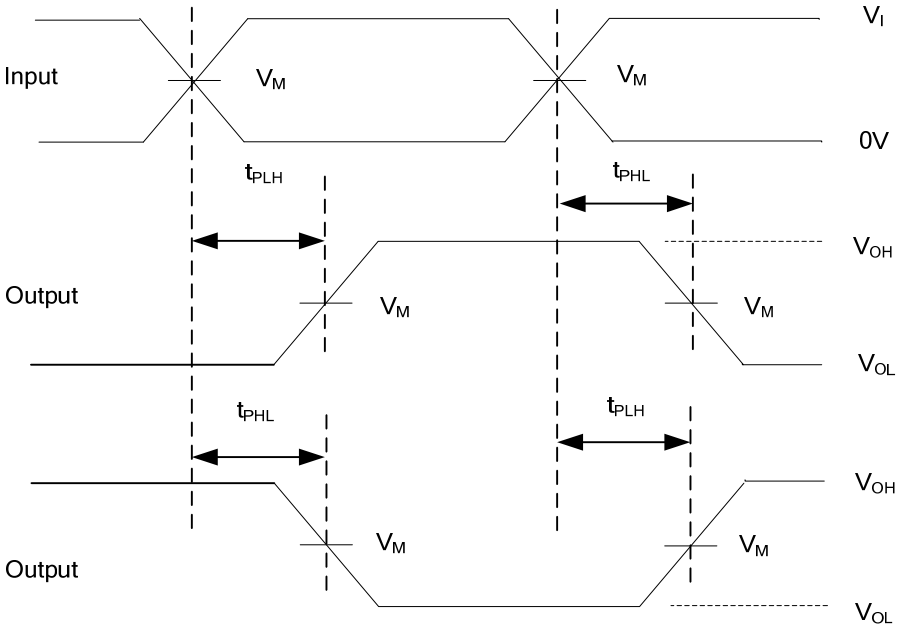

PROPAGATION DELAY TIMES

Note: 1. C_L includes probe and jig capacitance.
2. All input pulses are supplied by generators having the following characteristics: PRR ≤10MHz, Z_O=50Ω.

Figure 1. Test Circuit and Voltage Waveforms