5V 1A 2.25MHz SYNCHRONOUS STEP-DOWN DC/DC CONVERTER

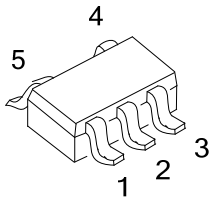

SOT-25

■ DESCRIPTION

The UTC **UD05104** is a 1A high frequency synchronous Step Down DC/DC converter using constant frequency, current mode architecture. The device integrates main switch and synchronous rectifier switch for high efficiency without an external schottky diode. To maximize light load efficiency, The UTC **UD05104** draws only 30μA quiescent current to improve light load efficiency. In shutdown, The UTC **UD05104** reduces supply current less than 1μA. The UTC **UD05104** can supply 1A of load current from 2.5V to 6.0V input voltage. The output voltage can be regulated as low as 0.6V. The switching frequency is internally set at 2.25MHz, as for operation mode: UTC **UD05104** is automatic PSM/PWM mode.

The UTC **UD05104** has built-in internal Soft Start, Short Circuit Protection and OTP functions, allowing the use of small surface mount inductors and capacitor.

■ FEATURES

* Input Voltage Range from 2.5V to 6.0V
* +/-2% 0.6V Feedback Voltage Accuracy
* 2.25MHz Switching Frequency
* Continuous Output Current up to 1A
* Low Quiescent Current of 30μA
* 0.1μA Shutdown Current
* 100% Duty Cycle Operation
* Built-in 170mΩ/150mΩ Power Switch
* Internal Soft-Start
* Cycle-by-Cycle Current Limit Protection
* Over-Load and Hiccup Mode Short Circuit
* Thermal Shutdown Protection

■ ORDERING INFORMATION

Ordering Number		Package	Packing
Lead Free	Halogen Free		
UD05104G-AF5-R	UD05104G-AF5-R	SOT-25	Tape Reel

UD05104G-AF5-R (1)Packing Type (2)Package Type (3)Green Package	(1) R: Tape Reel (2) AF5: SOT-25 (3) G: Halogen Free and Lead Free, L: Lead Free

■ MARKING

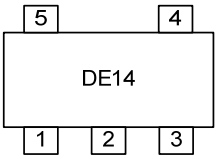

■ PIN CONFIGURATION

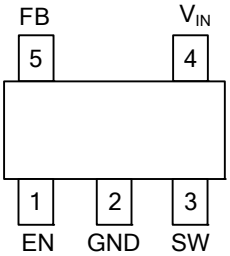

■ PIN DESCRIPTION

PIN NO	PIN NAME	DESCRIPTION
1	EN	Regulator Enable Control Input, Don't float this PIN * Drive EN High Level to turn on the converter * Drive EN Low Level to turn off the converter
2	GND	Ground
3	SW	Power Switches Node
4	V_{IN}	Main Input Supply Voltage
5	FB	Voltage Feedback

■ BLOCK DIAGRAM

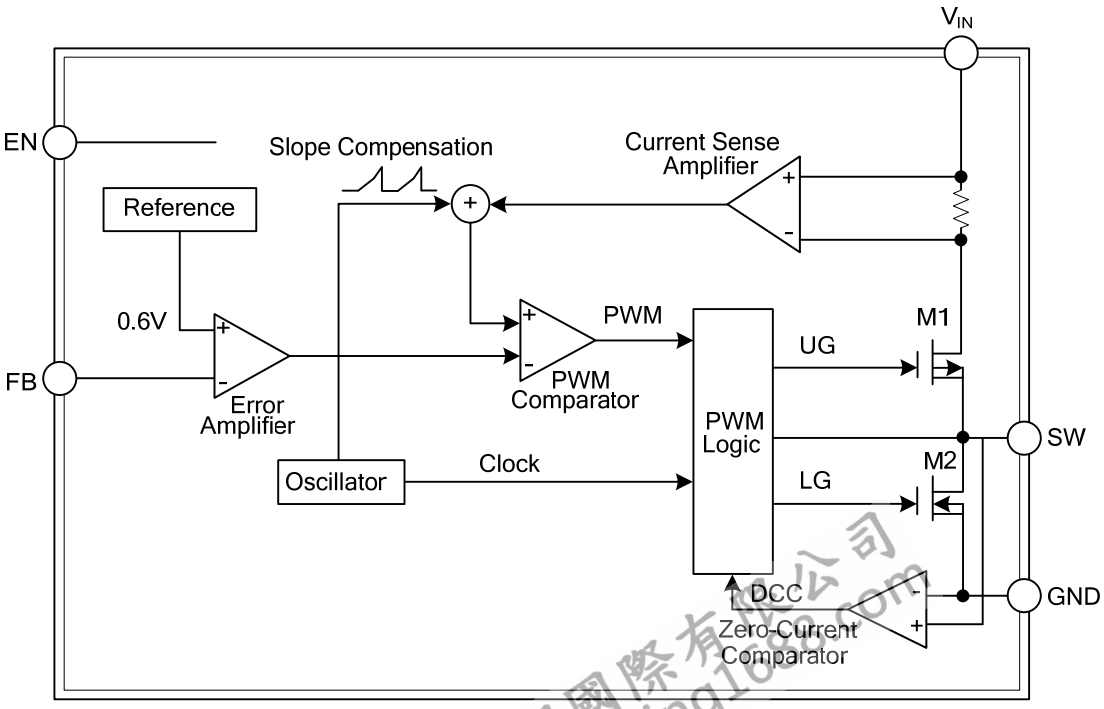

■ ABSOLUTE MAXIMUM RATING (Reference to GND)

PARAMETER	SYMBOL	RATINGS	UNIT
Input Supply Voltage	V_{IN}	GND-0.3 ~ 6.5	V
EN, FB Voltage		-0.3 ~ V_{IN}	V
Power Dissipation	P_D	0.48	W
Junction Temperature Range	T_J	-40 ~ +150	°C
Storage Temperature Range	T_{STG}	-65 ~ +150	°C

Note: Absolute maximum ratings are those values beyond which the device could be permanently damaged. Absolute maximum ratings are stress ratings only and functional device operation is not implied.

■ RECOMMENDED OPERATING CONDIIONS (Note 1)

PARAMETER	SYMBOL	RATINGS	UNIT
Input Voltage	V_{IN}	2.5 ~ 6	V
Operating Temperature Range		-40 ~ +85	°C

■ THERMAL CHARACTERISTICS

PARAMETER	SYMBOL	RATINGS	UNIT
Junction To Ambient	θ_{JA}	280	°C/W

■ ELECTRICAL CHARACTERISTICS (T_A=25°C, V_{IN}=5V, unless otherwise noted.)

PARAMETER	SYMBOL	TEST CONDITIONS	MIN	TYP	MAX	UNIT
Input Supply Voltage	V_{IN}		2.5		6.0	V
Quiescent Current		V_{EN}=V_{IN}, V_{FB}=0.65V, I_{OUT}=0A, No Switching		40		μA
Shutdown Current		V_{EN}=0V		0.1	1.5	μA
Regulated Feedback Voltage	V_{REF}	T_A=25°C	0.588	0.6	0.612	V
Feedback Current			-30		30	nA
V_{IN} Under Voltage Lockout Threshold		V_{IN} Rising		2.0		V
		V_{IN} Falling		1.9		V
PMOSFET On Resistance		I_{SW}=100mA , V_{IN}=5V		170		mΩ
NMOSFET On Resistance		I_{SW}=-100mA , V_{IN}=5V		150		mΩ
PMOSFET Current Limit		V_{IN}=3.3V		2.5		A
SW Leakage Current		V_{EN}=0V, V_{IN}=6.0V V_{SW}=0V or 6.0V	-1		1	μA
Oscillator Frequency		I_{OUT}=1A		2.25		MHz
Min. On-Time for HS Switch				80		ns
Maximum Duty		V_{FB}< 0.6V			100	%
EN On Threshold			1.5			V
EN Off Threshold					0.4	V
EN Input Current		V_{EN}=0V to V_{IN}	-1		1	μA
Soft Start Time				0.32		ms
Thermal Shutdown Threshold				160		°C

■ APPLICATION INFORMATION (Cont.)

Output Voltage

The output voltage is set using the FB pin and a resistor divider connected to the output as shown in AP Circuit below. The output voltage (V_{OUT}) can be calculated according to the voltage of the FB pin (V_{FB}) and ratio of the feedback resistors by the following equation, where (V_{FB}) is 0.6V:

$$V_{FB} = V_{OUT} \times \frac{R_2}{(R_1 + R_2)}$$

Thus the output voltage is:

$$V_{OUT} = 0.6 \times \frac{(R_1 + R_2)}{R_2}$$

Choose R1=100kΩ~200kΩ to ensure feedback loop noise immunity. It is optional to add a feed-forward capacitor C_{FF}=22~33pF in parallel with R1 to achieve better transient response performance.

■ TYPICAL APPLICATION CIRCUIT

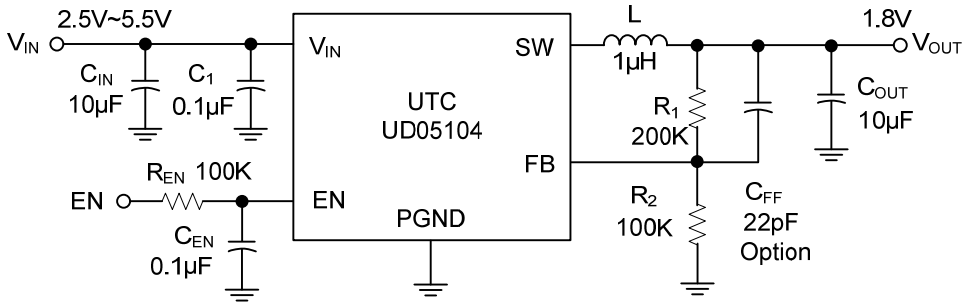

EVB BOM

Qty	Ref	Value	
2	C_{IN}, C_{OUT}	10μF	
2	C1, C_{EN}	0.1μF	
1	C_{FF}	22pF Option	
1	L	1μH	
1	R1	V_{OUT}=3.3V	200KΩ
		V_{OUT}=2.5V	187KΩ
		V_{OUT}=1.8V	200KΩ
		V_{OUT}=1.2V	100KΩ
		V_{OUT}=1V	66.5KΩ
1	R2	V_{OUT}=3.3V	44.2KΩ
		V_{OUT}=2.5V	59KΩ
		V_{OUT}=1.8V	100KΩ
		V_{OUT}=1.2V	100KΩ
		V_{OUT}=1V	100KΩ
1	R_{EN}	100KΩ	