2.25MHz, 1.2A, V_{FB}=0.6V SYNCHRONOUS STEP-DOWN CONVERTER

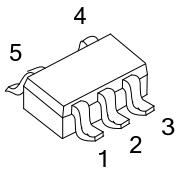

SOT-25

■ DESCRIPTION

UTC **UD05123** is a 2.25MHz constant frequency current mode PWM step-down converter. It is ideal for portable equipment requiring very high current up to 1.8A from single-cell Lithium-ion batteries while still achieving over 90% efficiency during peak load conditions. The 2.5V to 5.5V input voltage range makes UTC **UD05123** ideally suited for single Li-Ion, two to four AA battery-powered applications. 100% duty cycle provides low dropout operation, extending battery life in portable systems. Pulse skipping mode operation provides very low output ripple voltage for noise sensitive applications. Switching frequency is internally set at 2.25MHz, allowing the use of small surface mount inductors and capacitors. The internal synchronous switch increases efficiency and decreases need of an external Schottky diode. Low output voltages are easily supported with the 0.6V feedback reference voltage.

■ FEATURES

* Input Voltage Range :2.5V~5.5V
* Output Voltage: from 0.6V to V_{IN}
* High Efficiency: Up to 92%
* Constant Frequency Operation: 2.25MHz
* Output Current:1.2A
* Quiescent Current: 50uA (input < 4.2V)
* No Schottky Diode Required
* 100% Duty Cycle in Dropout
* 0.6V Reference Allows Low Output Voltages
* Current Mode Operation for Excellent Line and Load Transient Response
* Current limit, Enable function
* Short Circuit Protect (SCP)
* ≤1μA Shutdown Current

■ ORDERING INFORMATION

Ordering Number		Package	Packing
Lead Free	Halogen Free		
UD05123L-AF5-R	UD05123G-AF5-R	SOT-25	Tape Reel

UD05123G-AF5-R (1)Packing Type (2)Package Type (3)Green Package	(1) R: Tape Reel (2) AF5: SOT-25 (3) G: Halogen Free and Lead Free, L: Lead Free

■ MARKING

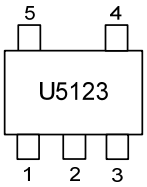

■ PIN CONFIGURATION

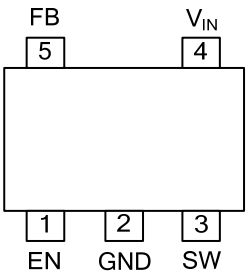

■ PIN DESCRIPTION

PIN NO.	PIN NAME	DESCRIPTION
1	EN	Enable pin H: Normal operation；L: Shutdown
2	GND	Ground Pin
3	SW	Switch output pin. Connect external inductor here. Minimize trace area at this pin to reduce EMI.
4	V_{IN}	Power Supply Input Pin
5	FB	Output Feedback pin

■ BLOCK DIAGRAM

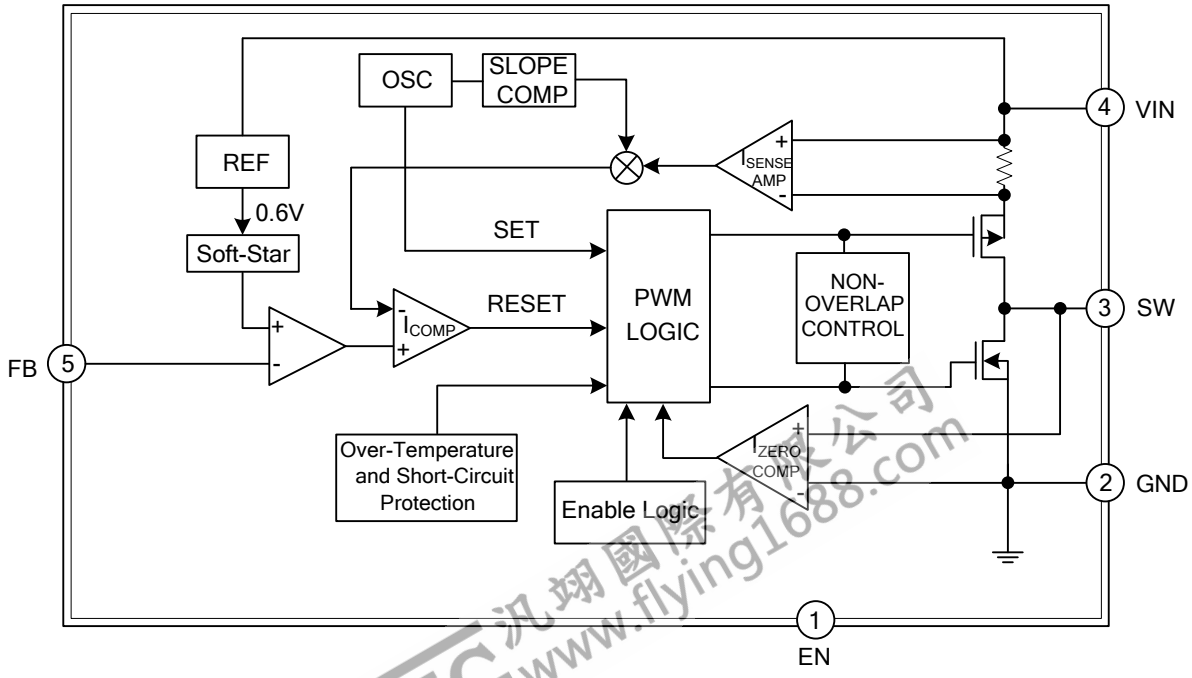

■ ABSOLUTE MAXIMUM RATING (T_A=25°C, unless otherwise specified)

PARAMETER	SYMBOL	RATINGS	UNIT
V_{IN} Pin Voltage	V_{IN}	6	V
Feedback Pin Voltage	V_{FB}	V_{CC}+0.3	V
EN Pin Voltage	V_{EN}	V_{CC}+0.3	V
Switch Pin Voltage	V_{SW}	V_{CC}+0.3	V
Junction Temperature	T_J	+125	°C
Operation Temperature Range	T_{OPR}	-40 ~ +85	°C
Storage Temperature Range	T_{STG}	-40 ~ +150	°C

Note: Absolute maximum ratings are those values beyond which the device could be permanently damaged. Absolute maximum ratings are stress ratings only and functional device operation is not implied.

■ THERMAL DATA

PARAMETER	SYMBOL	RATINGS	UNIT
Junction to Ambient	θ_{JA}	280	°C/W

■ ELECTRICAL CHARACTERISTICS (V_{IN}=V_{EN}=3.6V, T_A=25°C, unless otherwise specified) (Note 1)

PARAMETER	SYMBOL	TEST CONDITIONS	MIN	TYP	MAX	UNIT
Input Voltage Range (Note 2)	V_{IN}		2.5		5.5	V
Feedback Voltage	V_{FB}	V_{FB}=0.6V	0.5880	0.6000	0.6120	V
Feedback Bias Current	I_{FB}	V_{FB}=0.65V	-30		+30	nA
Quiescent Current	I_{CC}	V_{FB}=1V		50	90	μA
Shutdown Supply Current	I_{SD}	V_{EN}=0V		0.1	1	μA
Switching Current Limit	I_{LIMIT}	V_{IN}=5V		1.8		A
Oscillation Frequency	F_{OSC}	SW pin		2.25		MHz
$R_{DS(ON)}$ of P-CH MOSFET	R_{DSON}	I_{OUT}=1.0A		0.26	0.33	Ω
$R_{DS(ON)}$ of N-CH MOSFET	R_{DSON}	I_{OUT}=1.0A		0.26	0.33	Ω
EN Pin Logic Input Threshold Voltage	V_{ENL}				0.6	V
	V_{ENH}		1.2			V
EN Pin Input Current	I_{EN}			±0.1	±1	μA

Note: 100% production test at +25°C. Specifications over the temperature range are guaranteed by design and characterization.

■ TYPICAL APPLICATION CIRCUIT

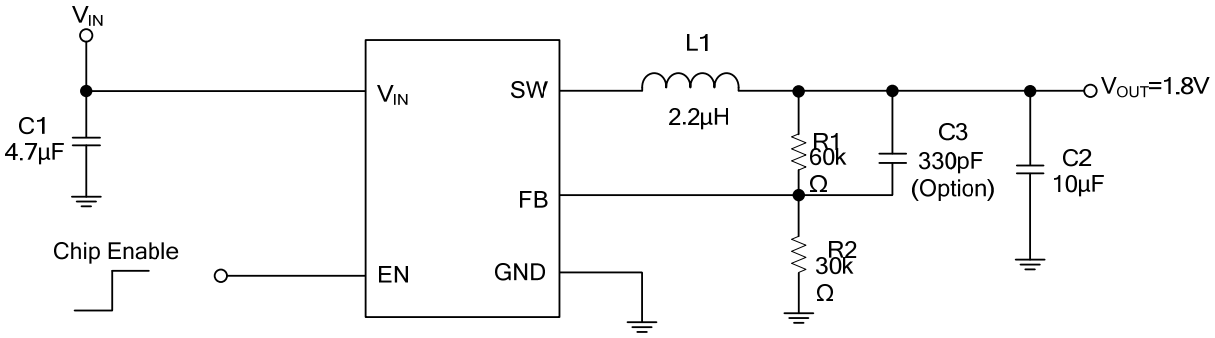

V_{OUT}=0.6×(1+R1/R2)