# 1.5MHz, 2A, $V_{FB}$=0.6V SYNCHRONOUS STEP-DOWN CONVERTER

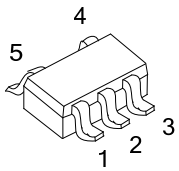


SOT-25

## ■ DESCRIPTION

UTC **UD05208** devices are synchronous step-down converters optimized for small solution size and high efficiency. The devices integrate switches capable of delivering an output current up to 2A. The devices are based on an adaptive on time with valley current mode control scheme. Typical operating frequency is 1.5MHz at medium to heavy loads. The devices are optimized to achieve very low output voltage ripple even with small external components and feature an excellent load transient response. During a light load, the **UD05208** automatically enter into Power Save Mode at the lowest quiescent current (50μA typ) to maintain high efficiency over the entire load current range. In shutdown, the current consumption is reduced to 1μA. The **UD05208** provide an adjustable output voltage via an external resistor divider. The output voltage start-up ramp is controlled by an internal soft start, typically 250 μs. Power sequencing is possible by configuring the Enable pin. Other features like over current protection and over temperature protection are built in.

## ■ FEATURES

* 2.7V to 5.5V Input Voltage Range
* 1.5MHz Typical Switching Frequency
* Output Current up to 2A
* Adaptive On-Time Current Control
* Power Save Mode for Light Load Efficiency
* 50μA Operating Quiescent Current
* Over Current Protection
* Internal Soft Startup of 250μs (Typ.)
* Adjustable Output Voltage
* Thermal Shutdown Protection
* Available in SOT25 Package

## ■ ORDERING INFORMATION

| Ordering Number | | Package | Packing |
|---|---|---|---|
| Lead Free | Halogen Free | | |
| UD05208L-AF5-R | UD05208G-AF5-R | SOT-25 | Tape Reel |

| | |
|---|---|
| UD05208G-AF5-R<br>(1)Packing Type<br>(2)Package Type<br>(3)Green Package | (1) R: Tape Reel<br>(2) AF5: SOT-25<br>(3) G: Halogen Free and Lead Free, L: Lead Free |

## ■ MARKING

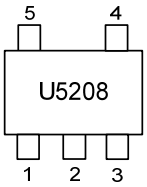


## ■ PIN CONFIGURATION

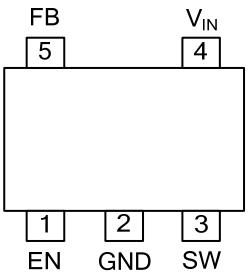


## ■ PIN DESCRIPTION

| PIN NO. | PIN NAME | DESCRIPTION |
|---|---|---|
| 1 | EN | Enable pin<br>H: Normal operation；L: Shutdown |
| 2 | GND | Ground Pin |
| 3 | SW | Switch pin connected to the internal MOSFET switches and inductor terminal. Connect the inductor of the output filter to this pin. |
| 4 | $V_{IN}$ | Power Supply Input Pin |
| 5 | FB | Feedback pin for the internal control loop. Connect this pin to the external feedback divider. |

## ■ BLOCK DIAGRAM

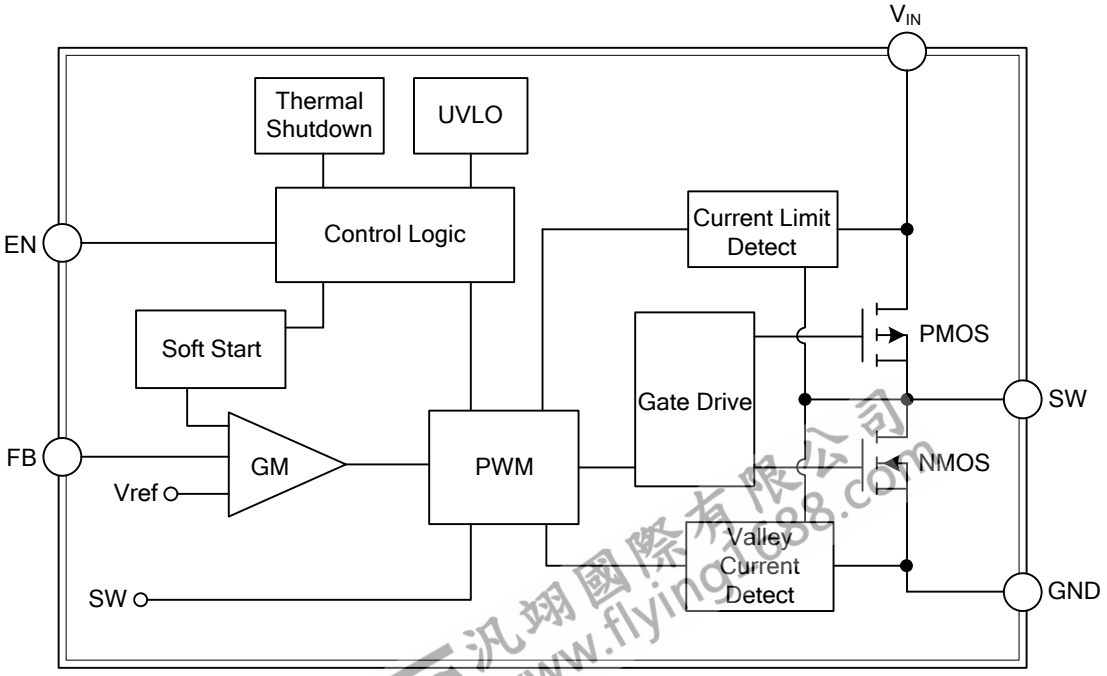

## ■ ABSOLUTE MAXIMUM RATING ($T_A$=25°C, unless otherwise specified)

| PARAMETER | SYMBOL | RATINGS | UNIT |
|---|---|---|---|
| Voltage range | $V_{IN}$ | 7 | V |
| EN Pin Voltage | $V_{EN}$ | 7 | V |
| Feedback Pin Voltage | $V_{FB}$ | 3.6 | V |
| Switch Pin Voltage | $V_{SW}$ | $V_{IN}$+0.3 | V |
| Junction Temperature | $T_J$ | -40 ~ +150 | °C |
| Operation Temperature Range | $T_{OPR}$ | -65 ~ +150 | °C |
| Storage Temperature Range | $T_{STG}$ | -65 ~ +150 | °C |

Note: Absolute maximum ratings are those values beyond which the device could be permanently damaged. Absolute maximum ratings are stress ratings only and functional device operation is not implied.

## ■ THERMAL DATA

| PARAMETER | SYMBOL | RATINGS | UNIT |
|---|---|---|---|
| Junction to Ambient | $\theta_{JA}$ | 208 | °C/W |

## ■ ELECTRICAL CHARACTERISTICS ($V_{IN}$=$V_{EN}$=3.6V, $T_A$=25°C, unless otherwise specified)

| PARAMETER | SYMBOL | TEST CONDITIONS | MIN | TYP | MAX | UNIT |
|---|---|---|---|---|---|---|
| Input voltage range | $V_{IN}$ | | 2.7 | | 5.5 | V |
| Quiescent current into $V_{IN}$ pin | $I_Q$ | $I_{OUT}$=0mA,Notswitching | | 50 | | uA |
| Under voltage lock out | $V_{UVLO}$ | | | 2.2 | | V |
| High-level input voltage | $V_{IH}$ | 2.7V≤$V_{IN}$≤5.5V | | 0.85 | | V |
| Low-level input voltage | $V_{IL}$ | 2.7V≤$V_{IN}$≤5.5V | | 0.8 | | V |
| Shutdown current into $V_{IN}$ pin | $I_{SD}$ | | | 1 | | μA |
| EN leakage current | $I_{EN}$,$L_{KG}$ | | | 1 | | μA |
| Feedback regulation voltage | $V_{FB}$ | | 0.588 | 0.6 | 0.612 | V |
| High-side FET on resistance | $R_{DS(on)}$ | $I_{SW}$=1000mA,$V_{IN}$=3.6V | | 120 | | mΩ |
| Low-side FET on resistance | | $I_{SW}$=1000mA,$V_{IN}$=3.6V | | 105 | | mΩ |
| Low-side FET valley current limit | $I_{LIM, LS}$ | | | 1 | | A |
| High-side FET peak current limit | $I_{LIM, HS}$ | | | 2.9 | | A |
| Switching frequency | $f_{SW}$ | $I_{LOAD}$=1A | | 1.5 | | MHz |
| Minimum off time | $t_{OFF\_MIN}$ | | | 70 | | ns |

## ■ DETAILED DESCRIPTION

**UD05208** operates with an adaptive on-time control scheme, which is able to dynamically adjust the on-time duration based on the input voltage and output voltage so that it can achieve relative constant frequency operation. The device operates at typically 1.5-MHz frequency pulse width modulation (PWM) at moderate to heavy load currents.

### POWER SAVE MODE

The device integrates a Power Save Mode with PFM to improve efficiency at light load. In Power Save Mode, the device only switches when the output voltage trips below a set threshold voltage. It ramps up the output voltage with several pulses and stops switching when the output voltage is higher than the set threshold voltage. PFM is exited and PWM mode entered in case the output current can no longer be supported in Power Save Mode.

### SOFT START

After enabling the device, internal soft-start circuitry monotonically ramps up the output voltage which reaches nominal output voltage during a soft-start time of 250 μs (typical). This avoids excessive inrush current and creates a smooth output voltage rise slope.

### SHORT CIRCUIT PROTECTION

To avoid mis-operation of the device, short circuit protection is implemented that latch output to GND when output short.

■ TYPICAL APPLICATION CIRCUIT

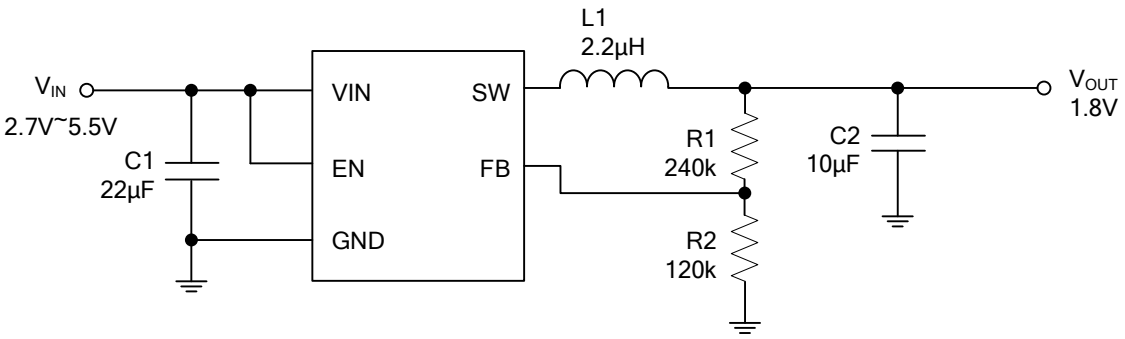

## ■ TYPICAL CHARACTERISTICS

Typical Application (PWM MODE)
($V_{IN}$=3.6V, $V_O/I_{LOAD}$=1.8V/0.16A)

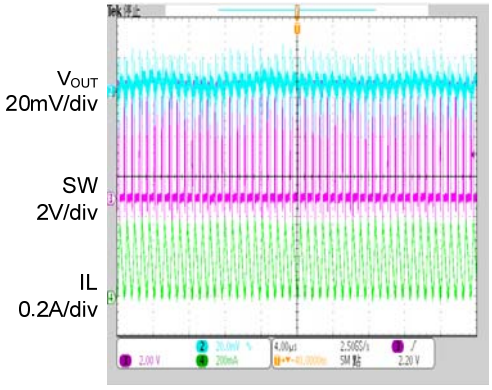


Typical Application (PFM MODE)
($V_{IN}$=3.6V, $V_O/I_{LOAD}$=1.8V/0A)

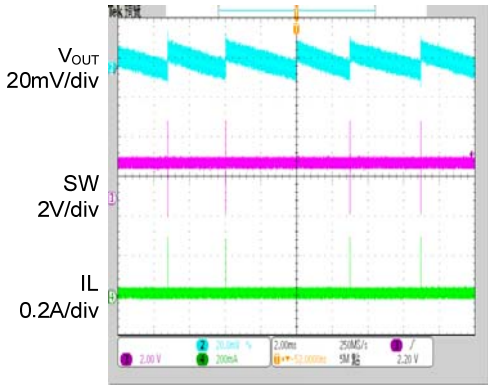


Typical Application (PFM MODE)
($V_{IN}$=3.6V, $V_O/I_{LOAD}$=1.8V/0.01A)

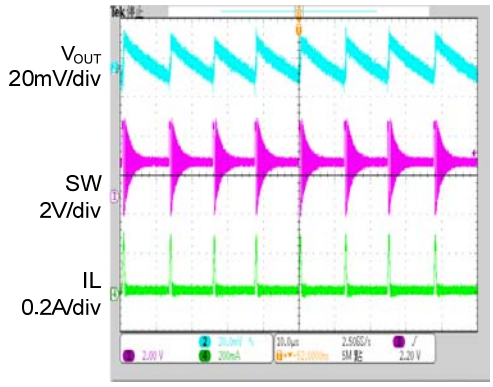


Typical Application (PFM MODE)
($V_{IN}$=3.6V, $V_O/I_{LOAD}$=1.8V/0.1A)

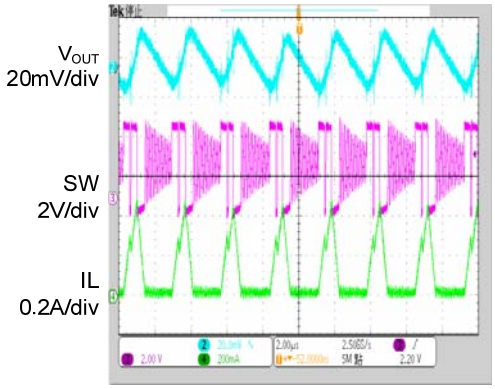


Switch Current Limit
($V_{IN}$=3.6V, $V_O$=1.8V)
($I_{LIM, HS}$=2.9A, $I_{LIM, LS}$=1A)

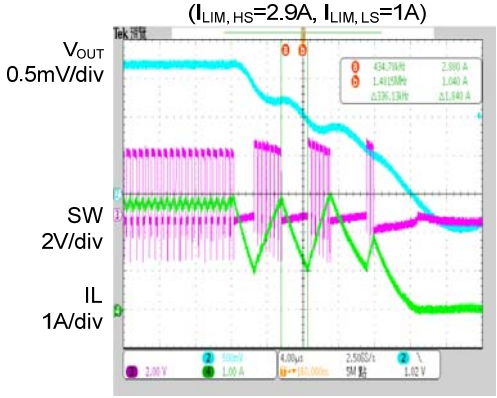


Short Circuit Protection
($V_{OUT}$ to Short and GND)