# 6A, 40V DUAL N-CHANNEL ENHANCEMENT MODE FIELD EFFECT TRANSISTOR

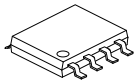

SOP-8

## ■ DESCRIPTION

The UTC **UD4840-H** is a dual N-Channel enhancement mode field effect transistor, it uses UTC's advanced technology to provide customers with a minimum on-state resistance and low gate charge, etc.

The UTC **UD4840-H** is suitable for use as a load switch or in PWM applications.

## ■ FEATURES

* $R_{DS(ON)}$< 32 mΩ @ $V_{GS}$=10V, $I_D$=6A
  $R_{DS(ON)}$< 42 mΩ @ $V_{GS}$=4.5V, $I_D$=5A
* Low gate charge

## ■ SYMBOL

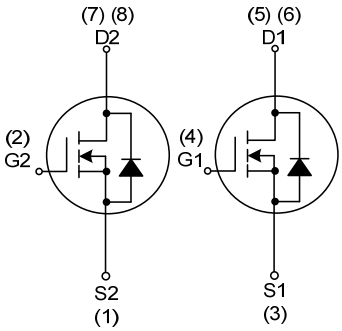


## ■ ORDERING INFORMATION

| Ordering Number | | Package | Pin Assignment | | | | | | | | Packing |
|---|---|---|---|---|---|---|---|---|---|---|---|
| Lead Free | Halogen Free | | 1 | 2 | 3 | 4 | 5 | 6 | 7 | 8 | |
| UD4840L-S08-R | UD4840G-S08-R | SOP-8 | S2 | G2 | S1 | G1 | D1 | D1 | D2 | D2 | Tape Reel |

Note: Pin Assignment: G: Gate D: Drain S: Source

| | |
|---|---|
| UD4840G-S08-R<br>(1)Packing Type<br>(2)Package Type<br>(3)Green Package | (1) R: Tape Reel<br>(2) S08: SOP-8<br>(3) G: Halogen Free and Lead Free, L: Lead Free |

## ■ MARKING

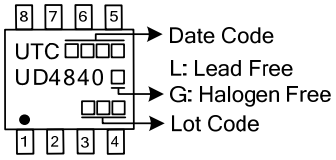

## ■ ABSOLUTE MAXIMUM RATINGS ($T_A$=25°C, unless otherwise noted)

| PARAMETER | | SYMBOL | RATINGS | UNIT |
|---|---|---|---|---|
| Drain-Source Voltage | | $V_{DSS}$ | 40 | V |
| Gate-Source Voltage | | $V_{GSS}$ | ±20 | V |
| Continuous Drain Current (Note 1) | $T_A$=25°C | $I_D$ | 6 | A |
| | $T_A$=70°C | | 5 | A |
| Pulsed Drain Current (Note 2) | | $I_{DM}$ | 20 | A |
| Single Pulsed Avalanche Energy | Single Pulsed (Note 3) | $E_{AS}$ | 5 | mJ |
| Power Dissipation | $T_A$=25°C | $P_D$ | 2 | W |
| | $T_A$=70°C | | 1.28 | W |
| Junction Temperature | | $T_J$ | -55 ~ +150 | °C |
| Storage Temperature Range | | $T_{STG}$ | -55 ~ +150 | °C |

Notes: 1. Absolute maximum ratings are those values beyond which the device could be permanently damaged. Absolute maximum ratings are stress ratings only and functional device operation is not implied.
2. Repetitive Rating: Pulse width limited by maximum junction temperature.
3. L = 0.1mH, $I_{AS}$ = 10A, $V_{DD}$ = 20V, $R_G$ = 25Ω, Starting $T_J$ = 25°C.

## ■ THERMAL CHARACTERISTICS

| PARAMETER | | SYMBOL | MIN | TYP | MAX | UNIT |
|---|---|---|---|---|---|---|
| Junction to Ambient (Note 1) | t≤10s | $\theta_{JA}$ | | 48 | 62.5 | °C/W |
| | Steady-State | | | 74 | 110 | °C/W |
| Junction to Lead (Note 3) | Steady-State | $\theta_{JC}$ | | 35 | 50 | °C/W |

Notes: 1. The value of $\theta_{JA}$ is measured with the device mounted on $1in^2$ FR-4 board with 2oz. Copper, in a still air environment with $T_A$=25°C. The value in any given application depends on the user's specific board design. The current rating is based on the t≤10s thermal resistance rating.
2. Repetitive rating, pulse width limited by junction temperature.
3. The $\theta_{JA}$ is the sum of the thermal impedence from junction to lead $\theta_{JL}$ and lead to ambient.

■ ELECTRICAL CHARACTERISTICS ($T_J$=25°C, unless otherwise noted)

| PARAMETER | | SYMBOL | TEST CONDITIONS | MIN | TYP | MAX | UNIT |
|---|---|---|---|---|---|---|---|
| **OFF CHARACTERISTICS** | | | | | | | |
| Drain-Source Breakdown Voltage | | $BV_{DSS}$ | $I_D$=10mA, $V_{GS}$=0V | 40 | | | V |
| Zero Gate Voltage Drain Current | | $I_{DSS}$ | $V_{DS}$=32V, $V_{GS}$=0V | | | 1 | μA |
| | | | $V_{DS}$=32V, $V_{GS}$=0V, $T_J$=55°C | | | 5 | μA |
| Gate-Source Leakage Current | Forward | $I_{GSS}$ | $V_{GS}$=+20V, $V_{DS}$=0V | | | +100 | nA |
| | Reverse | | $V_{GS}$=-20V, $V_{DS}$=0V | | | -100 | nA |
| **ON CHARACTERISTICS** | | | | | | | |
| Gate Threshold Voltage | | $V_{GS(TH)}$ | $V_{DS}$=$V_{GS}$, $I_D$=250μA | 1.5 | 2.3 | 3 | V |
| On State Drain Current | | $I_{D(ON)}$ | $V_{DS}$=5V, $V_{GS}$=10V | 20 | | | A |
| Static Drain-Source On-State Resistance | | $R_{DS(ON)}$ | $V_{GS}$=10V, $I_D$=6A | | | 32 | mΩ |
| | | | $V_{GS}$=10V, $I_D$=6A, $T_J$=125°C | | | 48 | mΩ |
| | | | $V_{GS}$=4.5V, $I_D$=5A | | | 42 | mΩ |
| Forward Transconductance | | $g_{FS}$ | $V_{DS}$=5V, $I_D$=6A | | 22 | | S |
| **DYNAMIC PARAMETERS** | | | | | | | |
| Input Capacitance | | $C_{ISS}$ | $V_{GS}$=0V, $V_{DS}$=25V, f=1MHz | | 400 | | pF |
| Output Capacitance | | $C_{OSS}$ | | | 50 | | pF |
| Reverse Transfer Capacitance | | $C_{RSS}$ | | | 25 | | pF |
| Gate Resistance | | $R_G$ | $V_{GS}$=0V, $V_{DS}$=0V, f=1MHz | | 2.7 | | Ω |
| **SWITCHING PARAMETERS** | | | | | | | |
| Total Gate Charge | | $Q_G$ | $V_{GS}$=4.5V, $V_{DS}$=32V, $I_D$=6.0A $I_G$=1mA | | 7.2 | | nC |
| | | | $V_{GS}$=10V, $V_{DS}$=20V, $I_D$=1.0A $I_G$=100μA | | 30 | | nC |
| Gate to Source Charge | | $Q_{GS}$ | | | 1.0 | | nC |
| Gate to Drain Charge | | $Q_{GD}$ | | | 2.0 | | nC |
| Turn-ON Delay Time | | $t_{D(ON)}$ | $V_{GS}$=10V, $V_{DS}$=30V, , $I_D$=0.5A $R_G$=25Ω | | 115 | | ns |
| Rise Time | | $t_R$ | | | 190 | | ns |
| Turn-OFF Delay Time | | $t_{D(OFF)}$ | | | 5 | | ns |
| Fall-Time | | $t_F$ | | | 19 | | ns |
| **SOURCE- DRAIN DIODE RATINGS AND CHARACTERISTICS** | | | | | | | |
| Maximum Body-Diode Continuous Current | | $I_S$ | | | | 3 | A |
| Diode Forward Voltage | | $V_{SD}$ | $I_S$=1A, $V_{GS}$=0V | | 0.77 | 1 | V |
| Body Diode Reverse Recovery Time | | $t_{rr}$ | $I_F$=6A, dI/dt=100A/μs | | 20.5 | | ns |
| Body Diode Reverse Recovery Charge | | $Q_{rr}$ | | | 14.5 | | nC |