LOW DROP FIXED AND ADJUSTABLE POSITIVE VOLTAGE REGULATORS

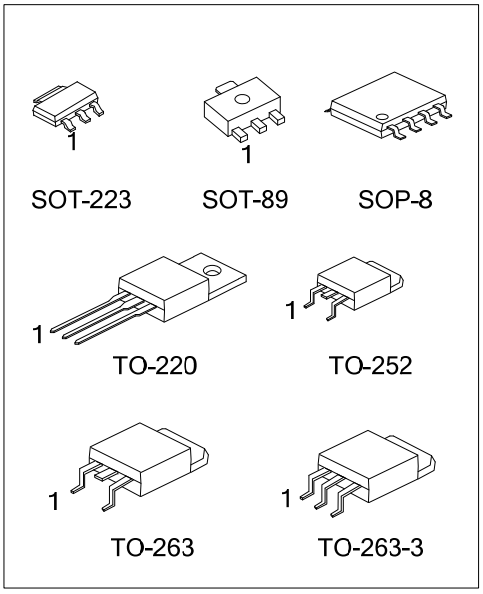

■ DESCRIPTION

The UTC **UR233** is a LOW DROP Voltage Regulator able to provide up to 0.8A of Output Current, available even in adjustable version (V_{REF}=1.25V).High efficiency is assured by NPN pass transistor. In fact in the case, unlike than PNP one, the Quiescent Current flows mostly into the load. Only a very common 10μF minimum capacitor is needed for stability. On chip trimming allows the regulator to reach a very tight output voltage tolerance, within ±1% at 25°C. The ADJUSTABLE **UR233** is pin to pin compatible with the other standard Adjustable voltage regulators maintaining the better performances in terms of Drop and Tolerance.

■ FEATURES

*Low dropout voltage (1.5V Typ.)
*Output current up to 0.8A
*Fixed output voltage of: 1.7V,1.8V,2.5V, 2,85V, 3.0V, 3.3V, 5.0V
*Adjustable version availability (V_{REF}=1.25V)
*Internal current and thermal limit
*Available in ±1%(at 25°C) and 2% in all temperature range
*Supply voltage rejection: 75dB (TYP)

■ ORDERING INFORMATION

Ordering Number		Package	① Pin Assignment	② Packing
Lead Free	Halogen Free			
UR233L-xx-AA3-①-②	UR233G-xx-AA3-①-②	SOT-223	A: GOI B: OGI C: GIO D: IGO	R: Tape Reel T: Tube
UR233L-xx-AB3-①-②	UR233G-xx-AB3-①-②	SOT-89		
UR233L-xx-TA3-①-②	UR233G-xx-TA3-①-②	TO-220		
UR233L-xx-TN3-①-②	UR233G-xx-TN3-①-②	TO-252		
UR233L-xx-TQ2-①-②	UR233G-xx-TQ2-①-②	TO-263		
UR233L-xx-TQ3-①-②	UR233G-xx-TQ3-①-②	TO-263-3		
UR233L-xx-S08-①-②	UR233G-xx-S08-①-②	SOP-8	GOOIxOOx	

Note: Pin Assignment: I: V_{IN} O: V_{OUT} G: GND

UR233L-xx-AA3-①-②
- (1)Packing Type
- (2)Pin Assignment
- (3)Package Type
- (4)Output Voltage Code
- (5)Lead Free

(1) R: Tape Reel, T: Tube
(2) refer to Pin Assignment
(3) AA3: SOT-223, AB3: SOT-89, TA3:TO-220, TN3: TO-252, TQ2: TO-263, TQ3: TO-263-3, S08: SOP-8
(4) xx: refer to Marking Information
(5) G: Halogen Free, L: Lead Free

■ MARKING INFORMATION

PACKAGE	VOLTAGE CODE	MARKING
SOT-223	17:1.7V 18:1.8V 25:2.5V 2J:2.85V 30:3.0V 33:3.3V 50:5.0V AD:ADJ	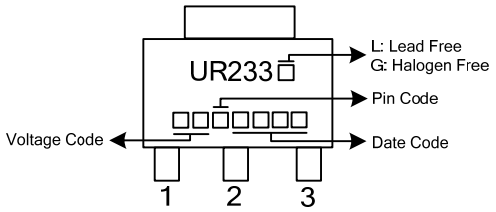
SOT-89		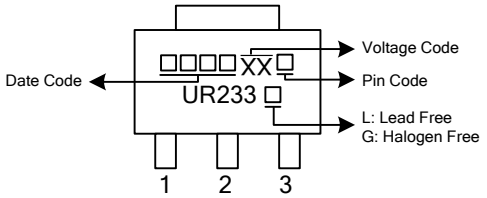
TO-220 TO-252 TO-263 TO-263-3		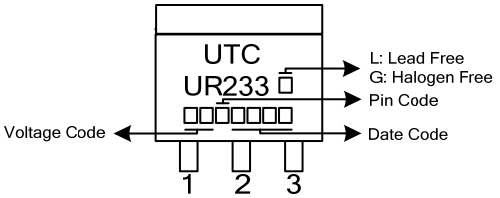
SOP-8		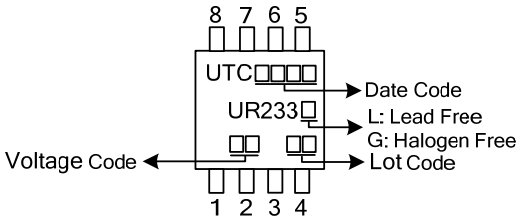

■ BLOCK DIAGRAM

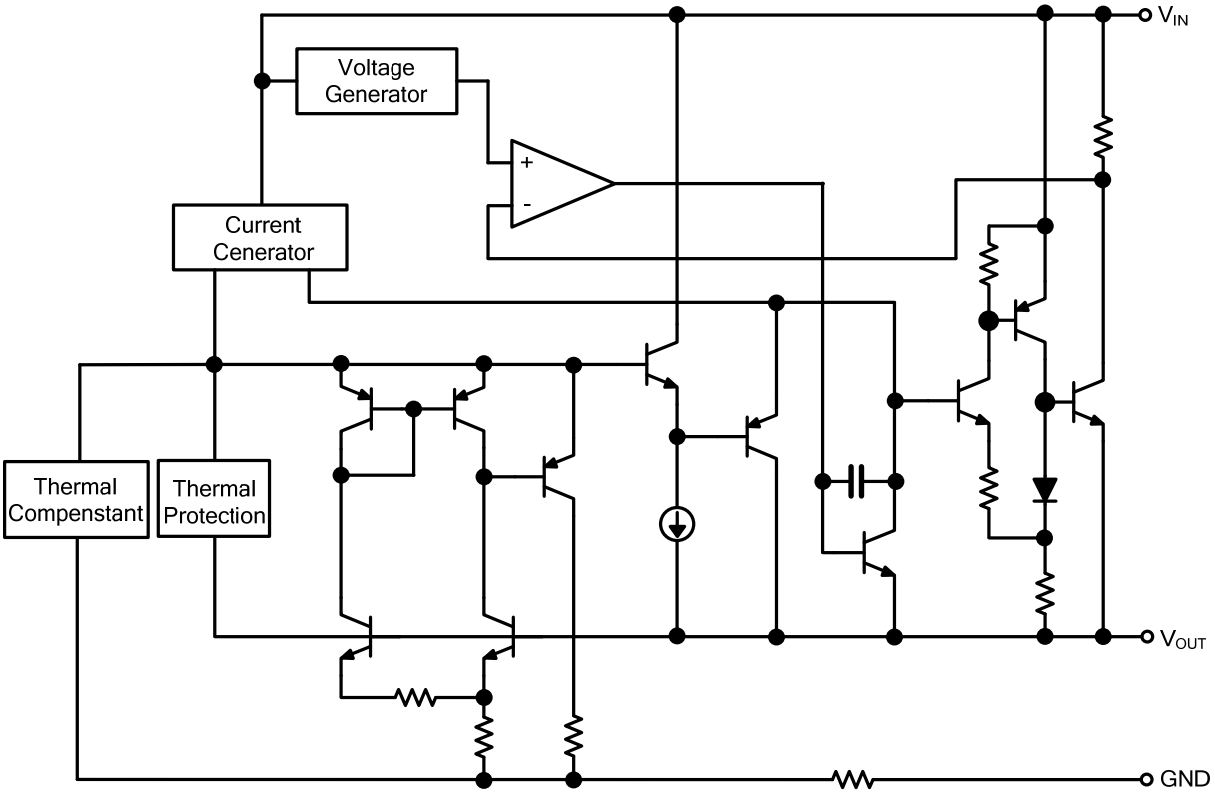

■ ABSOLUTE MAXIMUM RATINGS

PARAMETER		SYMBOL	VALUE	UNIT
DC Input Voltage		V_{IN}	12	V
Power Dissipation	SOT-223	P_D	0.740	W
	SOT-89		0.571	
	SOP-8		0.625	
	TO-252		1.471	
	TO-220		1.820	
	TO-263		2.222	
Operating Junction Temperature		T_{OPR}	-40 ~ +85	°C
Storage Temperature		T_{STG}	-65 ~ +150	°C

Note: Absolute maximum ratings are those values beyond which the device could be permanently damaged. Absolute maximum ratings are stress ratings only and functional device operation is not implied.

■ THERMAL DATA

PARAMETER		SYMBOL	RATING	UNIT
Junction-to-Ambient	SOT-223	θ_{JA}	135	°C/W
	SOT-89		175	
	SOP-8		160	
	TO-252		68	
	TO-220		55	
	TO-263		45	
Junction-to-Case	SOT-223	θ_{JC}	19	°C/W
	SOT-89		48	
	SOP-8		45	
	TO-252		7.5	
	TO-220		15	
	TO-263		7.8	

■ ELECTRICAL CHARACTERISTICS (T_J=0 ~ 125°C, unless otherwise specified)

For UR233-1.7

PARAMETER	SYMBOL	TEST CONDITIONS		MIN.	TYP.	MAX.	UNIT
Output Voltage	V_{OUT}	V_{IN} =3.7V, I_{OUT} =10mA, T_J =25°C	±1%	1.683	1.700	1.717	V
Output Voltage	V_{OUT}	V_{IN} =3.1 ~ 10V, I_{OUT} =2 ~ 800mA	±2%	1.666		1.734	V
Line Regulation	ΔV_{OUT}	V_{IN} =3.1 ~ 10V, I_{OUT} =2mA			1	6	mV
Load Regulation	ΔV_{OUT}	V_{IN} =3.1V, I_{OUT} =2 ~ 800mA			1	10	mV
Temperature Stability	ΔV_{OUT}				0.5		%
Long Term Stability	ΔV_{OUT}	1000 hrs, T_J =125°C			0.3		%
Operating Input Voltage	V_{IN}	I_{OUT} =100mA				12	V
Quiescent Current	I_Q	V_{IN} =10V			5	10	mA
Output Current	I_{OUT}	V_{IN} =6.7V, T_J =25°C		800	950	1200	mA
Output Noise Voltage	e_N	B=10Hz ~ 10KHz, T_J =25°C			100		μV
Supply Voltage Rejection	SVR	I_{OUT} =40mA, f=120Hz, T_J =25°C, V_{IN} =4.7V, V_{RIPPLE} =1V_{PP}		60	75		dB
Dropout Voltage	V_D					1.50	V
Thermal Regulation		T_A=25°C, 30ms Pulse			0.01	0.10	%/W

■ ELECTRICAL CHARACTERISTICS(Cont.)

For UR233-1.8

PARAMETER	SYMBOL	TEST CONDITIONS		MIN.	TYP.	MAX.	UNIT
Output Voltage	V_{OUT}	V_{IN} =3.8V, I_{OUT} =10mA, T_J =25°C	±1%	1.782	1.800	1.818	V
Output Voltage	V_{OUT}	V_{IN} =3.2 ~ 10V, I_{OUT} =2 ~ 800mA	±2%	1.764		1.836	V
Line Regulation	ΔV_{OUT}	V_{IN} =3.2 ~ 10V, I_{OUT} =2mA			1	6	mV
Load Regulation	ΔV_{OUT}	V_{IN} =3.2V, I_{OUT} =2 ~ 800mA			1	10	mV
Temperature Stability	ΔV_{OUT}				0.5		%
Long Term Stability	ΔV_{OUT}	1000 hrs, T_J =125°C			0.3		%
Operating Input Voltage	V_{IN}	Io=100mA				12	V
Quiescent Current	I_Q	V_{IN} =10V			5	10	mA
Output Current	I_{OUT}	V_{IN} =6.8V, T_J =25°C		800	950	1200	mA
Output Noise Voltage	e_N	B=10Hz ~ 10KHz, T_J =25°C			100		μV
Supply Voltage Rejection	SVR	I_{OUT}=40mA, f=120Hz, T_J =25°C, V_{IN} =4.8V, V_{RIPPLE} =1V_{PP}		60	75		dB
Dropout Voltage	V_D					1.50	V
Thermal Regulation		T_A =25°C, 30ms Pulse			0.01	0.10	%/W

For UR233-2.5

PARAMETER	SYMBOL	TEST CONDITIONS		MIN.	TYP.	MAX.	UNIT
Output Voltage	V_{OUT}	V_{IN} =4.5V, I_{OUT} =10mA, T_J =25°C	±1%	2.475	2.500	2.525	V
Output Voltage	V_{OUT}	V_{IN} =3.9 ~ 10V, I_{OUT} =2 ~ 800mA	±2%	2.450		2.550	V
Line Regulation	ΔV_{OUT}	V_{IN} =3.9 ~ 10V, I_{OUT} =2mA			1	6	mV
Load Regulation	ΔV_{OUT}	V_{IN} =3.9V, I_{OUT} =2 ~ 800mA			1	10	mV
Temperature Stability	ΔV_{OUT}				0.5		%
Long Term Stability	ΔV_{OUT}	1000 hrs, T_J =125°C			0.3		%
Operating Input Voltage	V_{IN}	I_{OUT} =100mA				12	V
Quiescent Current	I_Q	V_{IN} =10V			5	10	mA
Output Current	I_{OUT}	V_{IN} =7.5V, T_J =25°C		800	950	1200	mA
Output Noise Voltage	e_N	B=10Hz ~ 10KHz, T_J =25°C			100		μV
Supply Voltage Rejection	SVR	I_{OUT} =40mA, f=120Hz, T_J =25°C, V_{IN} =5.5V, V_{RIPPLE} =1V_{PP}		60	75		dB
Dropout Voltage	V_D					1.50	V
Thermal Regulation		T_A =25°C, 30ms Pulse			0.01	0.10	%/W

■ ELECTRICAL CHARACTERISTICS(Cont.)

For UR233-2.85

PARAMETER	SYMBOL	TEST CONDITIONS		MIN.	TYP.	MAX.	UNIT
Output Voltage	V_{OUT}	V_{IN} =4.85V, I_{OUT} =10mA, T_J =25°C	±1%	2.822	2.85	2.878	V
Output Voltage	V_{OUT}	V_{IN} =4.25 ~ 10V, I_{OUT} =2 ~ 800mA	±2%	2.793		2.907	V
Line Regulation	ΔV_{OUT}	V_{IN} =4.25 ~ 10V, I_{OUT} =2mA			1	6	mV
Load Regulation	ΔV_{OUT}	V_{IN} =4.25V, I_{OUT} =2 ~ 800mA			1	10	mV
Temperature Stability	ΔV_{OUT}				0.5		%
Long Term Stability	ΔV_{OUT}	1000 hrs, T_J =125°C			0.3		%
Operating Input Voltage	V_{IN}	I_{OUT} =100mA				12	V
Quiescent Current	I_Q	V_{IN} =10V			5	10	mA
Output Current	I_{OUT}	V_{IN} =7.85V, T_J =25°C		800	950	1200	mA
Output Noise Voltage	e_N	B=10Hz ~ 10KHz, T_J =25°C			100		μV
Supply Voltage Rejection	SVR	I_{OUT} =40mA, f=120Hz, T_J =25°C, V_{IN} =5.85V, V_{RIPPLE} =1V_{PP}		60	75		dB
Dropout Voltage	V_D					1.50	V
Thermal Regulation		T_A =25°C, 30ms Pulse			0.01	0.10	%/W

For UR233-3.0

PARAMETER	SYMBOL	TEST CONDITIONS		MIN.	TYP.	MAX.	UNIT
Output Voltage	V_{OUT}	V_{IN} =5V, I_{OUT} =10mA, T_J =25°C	±1%	2.97	3.00	3.03	V
Output Voltage	V_{OUT}	V_{IN} =4.5 ~ 12V, I_{OUT} =2 ~ 800 mA	±2%	2.94		3.06	V
Line Regulation	ΔV_{OUT}	V_{IN} =4.5 ~ 12V, I_{OUT} =2mA			1	6	mV
Load Regulation	ΔV_{OUT}	V_{IN} =4.5V, I_{OUT} =2 ~ 800mA			1	10	mV
Temperature Stability	ΔV_{OUT}				0.5		%
Long Term Stability	ΔV_{OUT}	1000 hrs, T_J =125°C			0.3		%
Operating Input Voltage	V_{IN}	I_{OUT} =100mA				12	V
Quiescent Current	I_Q	V_{IN} =12V			5	10	mA
Output Current	I_{OUT}	V_{IN} =8V, T_J =25°C		800	950	1200	mA
Output Noise Voltage	e_N	B=10Hz ~ 10KHz, T_J =25°C			100		μV
Supply Voltage Rejection	SVR	I_{OUT} =40mA, f=120Hz, T_J =25°C, V_{IN} =6V, V_{RIPPLE} =1V_{PP}		60	75		dB
Dropout Voltage	V_D					1.50	V
Thermal Regulation		T_A =25°C, 30ms Pulse			0.01	0.10	%/W

■ ELECTRICAL CHARACTERISTICS(Cont.)

For UR233-3.3

PARAMETER	SYMBOL	TEST CONDITIONS		MIN.	TYP.	MAX.	UNIT
Output Voltage	V_{OUT}	V_{IN} =5.3V, I_{OUT} =10mA, T_J =25°C	±1%	3.267	3.300	3.333	V
Output Voltage	V_{OUT}	V_{IN} =4.8 ~ 12V, I_{OUT} =2 ~ 800mA	±2%	3.234		3.366	V
Line Regulation	ΔV_{OUT}	V_{IN} =4.8 ~ 12V, I_{OUT} =2mA			1	6	mV
Load Regulation	ΔV_{OUT}	V_{IN} =4.8V, I_{OUT} =2 ~ 800mA			1	10	mV
Temperature Stability	ΔV_{OUT}				0.5		%
Long Term Stability	ΔV_{OUT}	1000 hrs, T_J =125°C			0.3		%
Operating Input Voltage	V_{IN}	I_{OUT} =100mA				12	V
Quiescent Current	I_Q	V_{IN} =12V			5	10	mA
Output Current	I_{OUT}	V_{IN} =8.3V, T_J =25°C		800	950	1200	mA
Output Noise Voltage	e_N	B=10Hz ~ 10KHz, T_J =25°C			100		μV
Supply Voltage Rejection	SVR	I_{OUT} =40mA, f=120Hz, T_J =25°C, V_{IN} =6.3V, V_{RIPPLE} =1V_{PP}		60	75		dB
Dropout Voltage	V_D					1.50	V
Thermal Regulation		T_A =25°C, 30ms Pulse			0.01	0.10	%/W

For UR233-5.0

PARAMETER	SYMBOL	TEST CONDITIONS		MIN.	TYP.	MAX.	UNIT
Output Voltage	V_{OUT}	V_{IN} =7V, I_{OUT} =10mA, T_J =25°C	±1%	4.95	5.00	5.05	V
Output Voltage	V_{OUT}	V_{IN} =6.5 ~ 12V, I_{OUT} =2 ~ 800mA	±2%	4.90		5.10	V
Line Regulation	ΔV_{OUT}	V_{IN} =6.5 ~ 12V, I_{OUT} =2mA			1	10	mV
Load Regulation	ΔV_{OUT}	V_{IN} =6.5V, I_{OUT} =2 ~ 800mA			1	15	mV
Temperature Stability	ΔV_{OUT}				0.5		%
Long Term Stability	ΔV_{OUT}	1000 hrs, T_J =125°C			0.3		%
Operating Input Voltage	V_{IN}	I_{OUT} =100mA				12	V
Quiescent Current	I_Q	V_{IN} =12V			5	10	mA
Output Current	I_{OUT}	V_{IN} =10V, T_J =25°C		800	950	1200	mA
Output Noise Voltage	e_N	B=10Hz ~ 10KHz, T_J =25°C			100		μV
Supply Voltage Rejection	SVR	I_{OUT} =40mA, f=120Hz, T_J =25°C, V_{IN} =8V, V_{RIPPLE} =1V_{PP}		60	75		dB
Dropout Voltage	V_D					1.50	V
Thermal Regulation		T_A =25°C, 30ms Pulse			0.01	0.10	%/W

■ ELECTRICAL CHARACTERISTICS(Cont.)

UR233-ADJ

PARAMETER	SYMBOL	TEST CONDITIONS		MIN.	TYP.	MAX.	UNIT
Reference Voltage	V_{REF}	V_{IN} - V_{OUT} =2V, I_{OUT} =10mA, T_J =25°C	±1%	1.238	1.25	1.262	V
Reference Voltage	V_{REF}	V_{IN} = V_{OUT} +1.5V ~ 10V, I_{OUT} =10 ~ 800mA	±2%	1.225		1.275	V
Line Regulation	ΔV_{OUT}	V_{IN} = V_{OUT} +1.5V ~ 10V, I_{OUT} =10mA			0.035	0.200	%
Load Regulation	ΔV_{OUT}	V_{IN} - V_{OUT} =3V, I_{OUT} =10 ~ 800mA			0.10	0.400	%
Temperature Stability	ΔV_{OUT}				0.50		%
Long Term Stability	ΔV_{OUT}	1000 hrs, T_J =125°C			0.3		%
Operating Input Voltage	V_{IN}					12	V
Adjustment Pin Current	I_{ADJ}	V_{IN} ≤12V			60	120	μA
Adjustment Pin Current Change	ΔI_{ADJ}	V_{IN} = V_{OUT} +1.5V ~ 10V, I_{OUT} =10 ~ 800mA			1	5	μA
Minimum Load Current	$I_{OUT(MIN)}$	V_{IN} =12V			2	5	mA
Output Current	I_{OUT}	V_{IN} -V_{OUT} =5V, T_J =25°C		800	950	1200	mA
Output Noise (%Vo)	e_N	B=10Hz ~ 10KHz, T_J =25°C			0.003		%
Supply Voltage Rejection	SVR	I_{OUT} =40mA, f=120Hz, T_J =25°C, V_{IN} - V_{OUT} =3V, V_{RIPPLE} =1V_{PP}		60	75		dB
Dropout Voltage	V_D					1.50	V
Thermal Regulation		T_A =25°C, 30ms Pulse			0.01	0.10	%/W

■ APPLICATION CIRCUITS

FIXED VOLTAGE

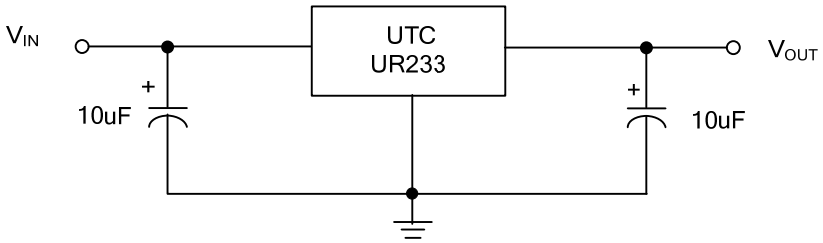

ADJUSTABLE

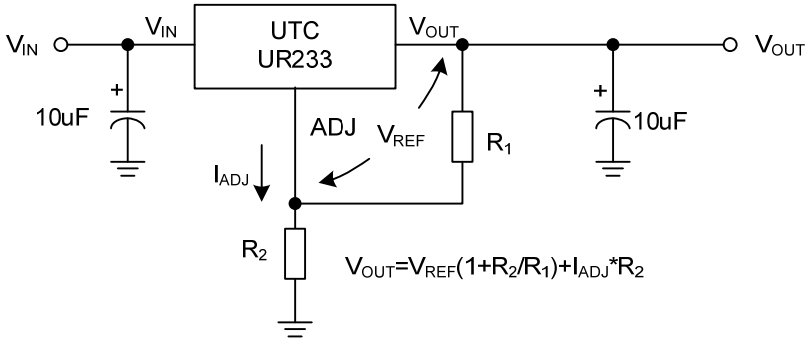

■ TYPICAL CHARACTERISTICS

Reference Voltge vs. Temperature

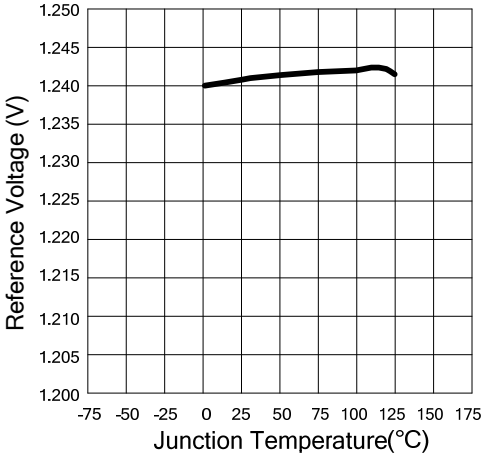

Output Voltage vs. Temperautre