3A SYNCHRONOUS BUCK REGULATOR

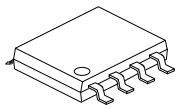

SOP-8

■ DESCRIPTION

The UTC **USR1021** is a high efficiency, 3A synchronous buck regulator. The UTC **USR1021** works from a 6V to 18V input voltage range, and provides up to 3A of continuous output current with an output voltage adjustable down to 0.8V.

The UTC **USR1021** comes in an SOP-8 packages and is rated over a -40°C~+85°C ambient temperature range.

■ FEATURES

* 6V~18V operating input voltage range
* High efficiency
* Internal soft start
* 1.5% initial output accuracy
* Output voltage adjustable to 0.8V
* 3A continuous output current
* Cycle-by-cycle current limit
* 500kHz PWM operation
* Thermal shutdown
* Short-circuit protection

■ ORDERING INFORMATION

Ordering Number		Package	Packing
Lead Free	Halogen Free		
USR1021L-S08-R	USR1021G-S08-R	SOP-8	Tape Reel
USR1021L-S08-T	USR1021G-S08-T	SOP-8	Tape Reel

Note: xx: Output Voltage, refer to Marking Information.

USR1021L-S08-R (1)Packing Type (2)Package Type (3)Halogen Free	(1) R: Tape Reel, T: Tube (2) S08: SOP-8 (3) L: Lead Free, G: Halogen Free

■ PIN CONFIGURATION

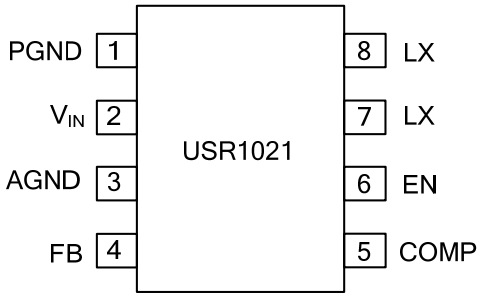

■ PIN DESCRIPTION

PIN NO.	PIN NAME	DESCRIPTION
1	PGND	Power ground
2	V_{IN}	Supply voltage input
3	AGND	Reference connectio for controller section
4	FB	Feedback voltage
5	COMP	Compensation pin
6	EN	Enable pin
7, 8	LX	Switch pin

■ BLOCK DIAGRAM

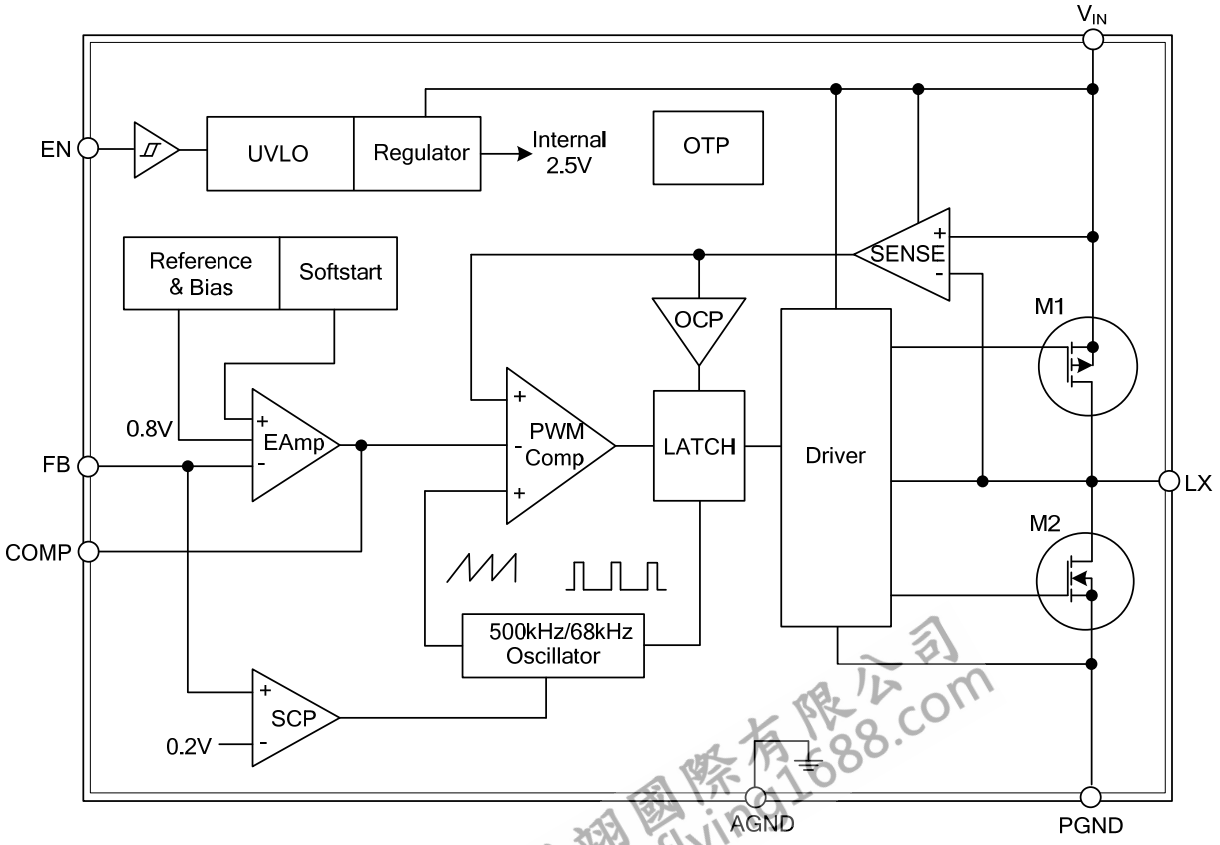

■ ABSOLUTE MAXIMUM RATING

PARAMETER	SYMBOL	RATINGS	UNIT
Supply Voltage	V_{IN}	18	V
LX to AGND		-0.7~V_{IN}+0.3	V
EN to AGND		-0.3~V_{IN}+0.3	V
FB to AGND		-0.3~6.0	V
COMP to AGND		-0.3~6.0	V
PGND to AGND		-0.3~+0.3	V
Junction Temperature	T_J	+150	°C
Storage Temperature	T_{STG}	-65~+150	°C

Note: Absolute maximum ratings are those values beyond which the device could be permanently damaged. Absolute maximum ratings are stress ratings only and functional device operation is not implied.

■ THERMAL DATA

PARAMETER	SYMBOL	RATINGS	UNIT
Junction to Ambient (Note 2)	θ_{JA}	87	°C/W

■ RECOMMENDED OPERATING CONDIIONS

PARAMETER	SYMBOL	RATINGS	UNIT
Supply Voltage	V_{IN}	6~18	V
Output Voltage Range		0.8~V_{IN}	V
Ambient Temperature	T_A	-40~+85	°C

■ ELECTRICAL CHARACTERISTICS

(T_A=25°C, V_{IN}=V_{EN}=12V, V_{OUT}=3.3V, unless otherwise specified) (Note 3)

PARAMETER	SYMBOL	TEST CONDITIONS	MIN	TYP	MAX	UNIT
Supply Voltage	V_{IN}		6		18	V
Supply Current (Quiescent)	I_{IN}	I_{OUT}=0, V_{FB}=1.2V, V_{EN}>2V		3.5	5	mA
Shutdown Supply Current	I_{OFF}	V_{EN}=0V		1	10	μA
Feedback Voltage	V_{FB}	T_A=25 °C	0.788	0.8	0.812	V
Load Regulation				0.5		%
Line Regulation				1		%
Feedback Voltage Input Current	I_{FB}				200	nA
EN Input Threshold	V_{EN}	Off Threshold			0.6	V
		On Threshold	2			V
SS Time		C_{SS}=16nF		2		ms
MODULATOR						
Frequency	f_O		400	500	600	kHz
Maximum Duty Cycle	D_{MAX}		85			%
Controllable Minimum On Time	T_{MIN}				150	ns
Current Sense Transconductance				7		A/V
Error Amplifier Transconductance				180		μA/V
PROTECTION						
Current Limit	I_{LIMT}		3.5	4.5		A
Over-Temperature Shutdown Limit		T_J Rising		150		°C
		T_J Falling		100		°C

Notes: 1. Devices are inherently ESD sensitive, handling precautions are required. Human body model rating: 1.5 kΩ in series with 100pF.

2. The value of θ_{JA} is measured with the device mounted on a 1-in^2 FR-4 board with 2oz. Copper, in a still air environment with T_A=25°C. The value in any given application depends on the user's specific board design.

3. Specification in BOLD indicate an ambient temperature range of -40°C~+85°C. These specifications are guaranteed by design.

■ TYPICAL APPLICATION CIRCUIT