-4A, -20V P-CHANNEL POWER MOSFET

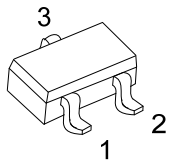

SOT-23
(EIAJ SC-59)

■ DESCRIPTION

The UTC **UT3415** is a P-channel MOS Field Effect Transistor. it uses UTC's advanced technology to provide the customers with high switching speed and a minimum on-state resistance.

The UTC **UT3415** is suitable for high voltage switching applications.

■ FEATURES

* $R_{DS(ON)}$ ≤ 45mΩ @ V_{GS}=-4.5V, I_D=-4.0A
  $R_{DS(ON)}$ ≤ 62mΩ @ V_{GS}=-2.5V, I_D=-4.0A
  $R_{DS(ON)}$ ≤ 84mΩ @ V_{GS}=-1.8V, I_D=-2.0A
  $R_{DS(ON)}$ ≤ 105mΩ @ V_{GS}=-1.5V, I_D=-1.0A
* High switching speed
* Low input capacitance

■ SYMBOL

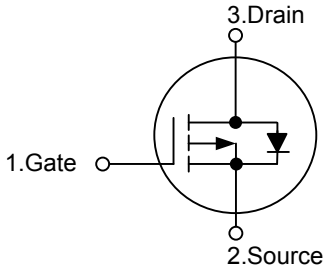

■ ORDERING INFORMATION

Ordering Number		Package	Pin Assignment			Packing
Lead Free	Halogen Free		1	2	3	
UT3415L-AE3-R	UT3415G-AE3-R	SOT-23	G	S	D	Tape Reel

Note: Pin Assignment: G: Gate S: Source D: Drain

UT3415G-AE3-R (1)Packing Type (2)Package Type (3)Green Package	(1) R: Tape Reel (2) AE3: SOT-23 (3) G: Halogen Free and Lead Free, L: Lead Free

■ MARKING

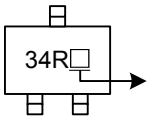

L: Lead Free
G: Halogen Free

■ ABSOLUTE MAXIMUM RATING (T_C=25°C, unless otherwise specified)

PARAMETER		SYMBOL	RATINGS	UNIT
Drain-Source Voltage		V_{DSS}	-20	V
Gate-Source Voltage		V_{GSS}	±8	V
Drain Current	DC	I_D	-4	A
	Pulsed (Note 2)	I_{DM}	-8	A
Single Avalanche Energy (Note 3)		E_{AS}	48	mJ
Peak Diode Recovery dv/dt (Note 4)		dv/dt	1.38	V/ns
Power Dissipation		P_D	1.5	W
Junction Temperature		T_J	+150	°C
Storage Temperature Range		T_{STG}	-55 ~ +150	°C

Notes: 1. Absolute maximum ratings are those values beyond which the device could be permanently damaged. Absolute maximum ratings are stress ratings only and functional device operation is not implied.
2. Repetitive Rating : Pulse width limited by maximum junction temperature.
3. L=10mH, I_{AS}=-3.1A, V_{DD}= -50V, R_G=25Ω, Starting T_J=25°C.
4. I_{SD} ≤-1.0A, di/dt ≤200A/μs, V_{DD} ≤BV_{DSS}, Starting T_J=25°C.

■ THERMAL DATA

PARAMETER	SYMBOL	RATINGS	UNIT
Junction to Ambient	θ_{JA}	90	°C/W

Note: The data tested by surface mounted on a 1 inch^2 FR-4 board with 2OZ copper.

■ ELECTRICAL CHARACTERISTICS (T_A=25°C unless otherwise specified)

PARAMETER		SYMBOL	TEST CONDITIONS	MIN	TYP	MAX	UNIT
OFF CHARACTERISTICS							
Drain-Source Breakdown Voltage		BV_{DSS}	V_{GS} =0 V, I_D =-250 μA	-20			V
Drain-Source Leakage Current		I_{DSS}	V_{DS}=-20V, V_{GS}=0V			-1.0	μA
Gate-Source Leakage Current	Forward	I_{GSS}	V_{GS}=+8V, V_{DS}=0V			+100	nA
	Reverse		V_{GS}=-8V, V_{DS}=0V			-100	nA
ON CHARACTERISTICS							
Gate Threshold Voltage		$V_{GS(TH)}$	V_{DS}= V_{GS}, I_D=-250μA	-0.3		-0.9	V
Static Drain-Source On-State Resistance		$R_{DS(ON)}$	V_{GS}=-4.5V, I_D=-4.0A			45	mΩ
			V_{GS}=-2.5V, I_D=-4.0A			62	mΩ
			V_{GS}=-1.8V, I_D=-2.0A			84	mΩ
			V_{GS}=-1.5V, I_D=-1.0A			105	mΩ
DYNAMIC PARAMETERS							
Input Capacitance		C_{ISS}	V_{GS}=0V, V_{DS}=-10V, f=1.0MHz		1660		pF
Output Capacitance		C_{OSS}			215		pF
Reverse Transfer Capacitance		C_{RSS}			205		pF
SWITCHING PARAMETERS							
Total Gate Charge		Q_G	V_{DS}=-20V, V_{GS}=-10V, I_D=-4.0A , I_G=-1mA (Note 1, 2)		85		nC
Gate to Source Charge		Q_{GS}			2.6		nC
Gate to Drain Charge		Q_{GD}			8.8		nC
Turn-ON Delay Time		$t_{D(ON)}$	V_{DD}=-20V, V_{GS}=-10V, I_D=-4.0A, R_G=25Ω (Note 1, 2)		8		ns
Rise Time		t_R			21.6		ns
Turn-OFF Delay Time		$t_{D(OFF)}$			376		ns
Fall-Time		t_F			137		ns
SOURCE-DRAIN DIODE RATINGS AND CHARACTERISTICS							
Maximum Continuous Drain-Source Diode Forward Current		I_S				-4	A
Maximum Pulsed Drain-Source Diode Forward Current		I_{SM}				-8	A
Diode Forward Voltage		V_{SD}	I_F=-4.0A, V_{GS}=0V			-1.4	V
Body Diode Reverse Recovery Time		t_{rr}	I_F=-4.0A, V_{GS}=0V, di/dt=100A/μs		2616		ns
Body Diode Reverse Recovery Charge		Q_{rr}			15.5		nC

Notes: 1. Pulse Test: Pulse width ≤ 300μs, Duty cycle ≤ 2%.
2. Essentially independent of operating temperature.

■ TEST CIRCUITS AND WAVEFORMS

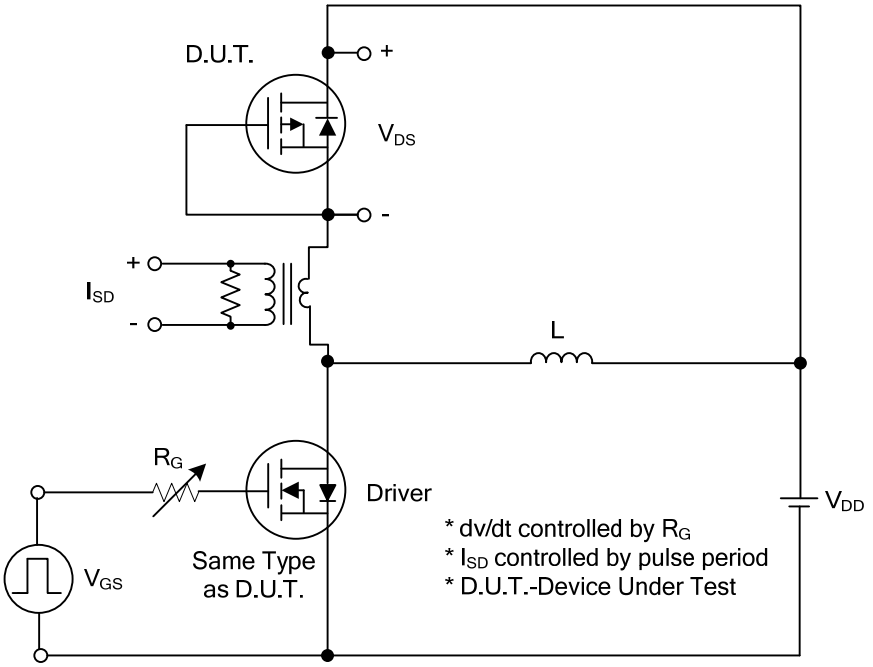

Peak Diode Recovery dv/dt Test Circuit

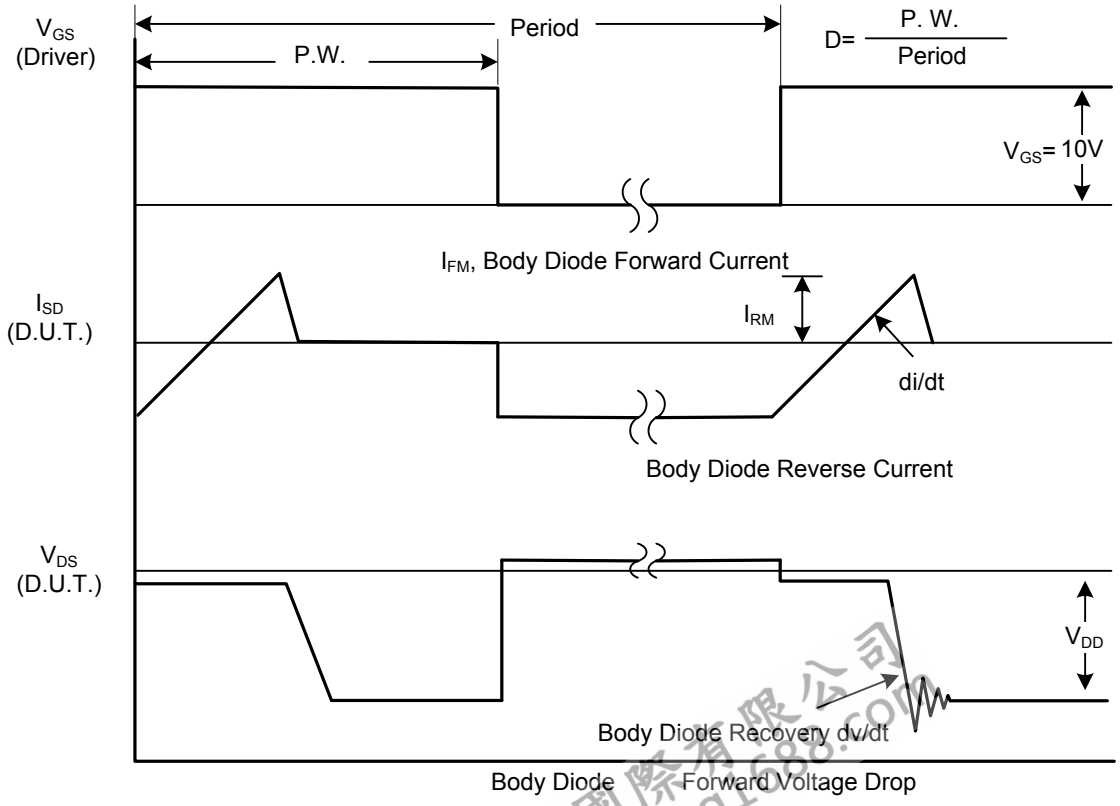

Peak Diode Recovery dv/dt Waveforms

■ TEST CIRCUITS AND WAVEFORMS

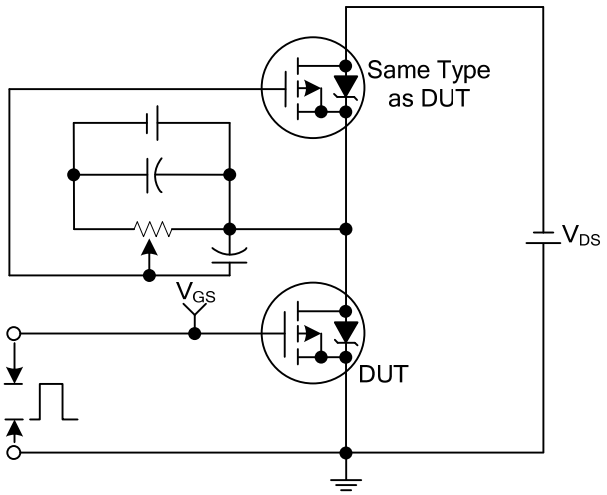

Gate Charge Test Circuit

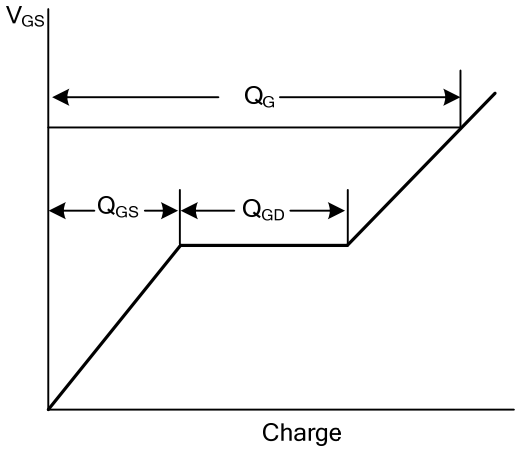

Gate Charge Waveforms

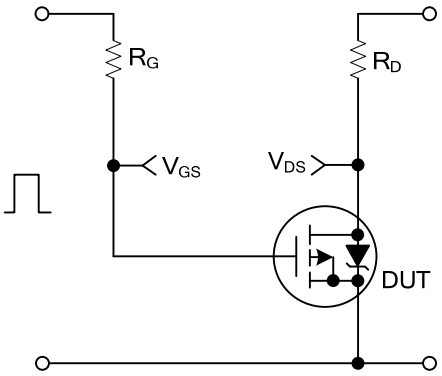

Resistive Switching Test Circuit

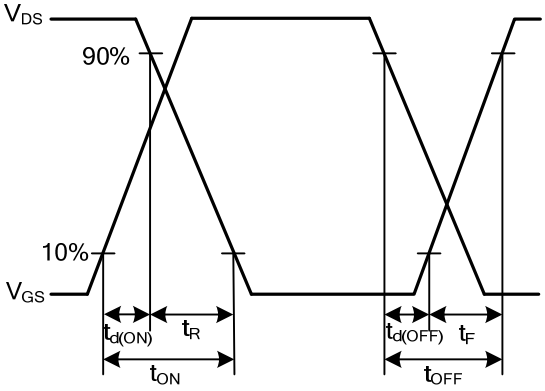

Resistive Switching Waveforms

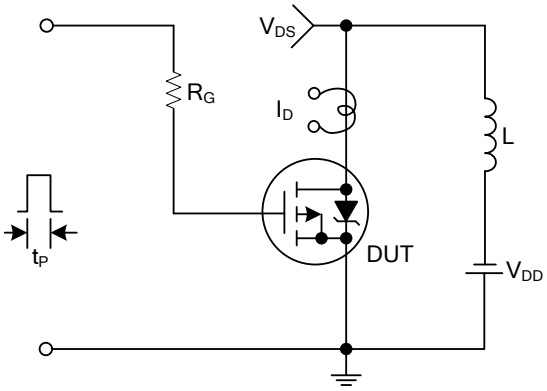

Unclamped Inductive Switching Test Circuit

$$E_{AS}=\frac{1}{2}LI_{AS}^2\frac{BV_{DSS}}{BV_{DSS}-V_{DD}}$$

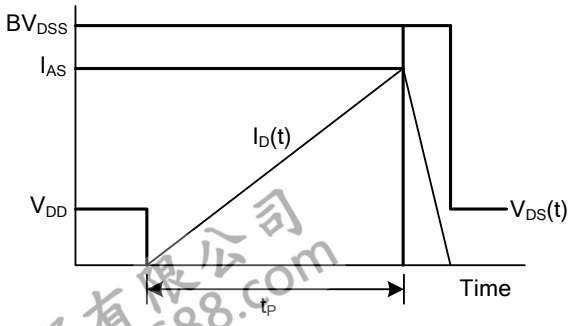

Unclamped Inductive Switching Waveforms

■ TYPICAL CHARACTERISTICS

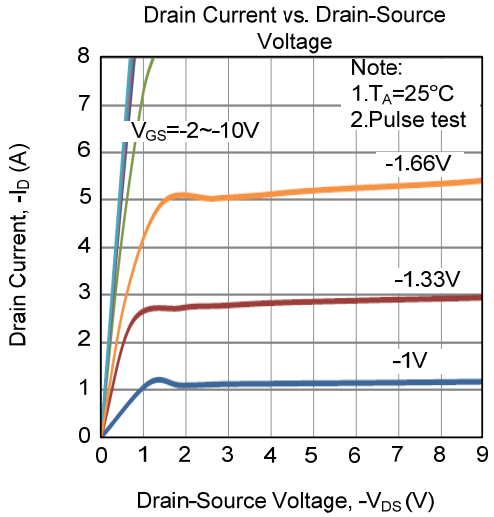

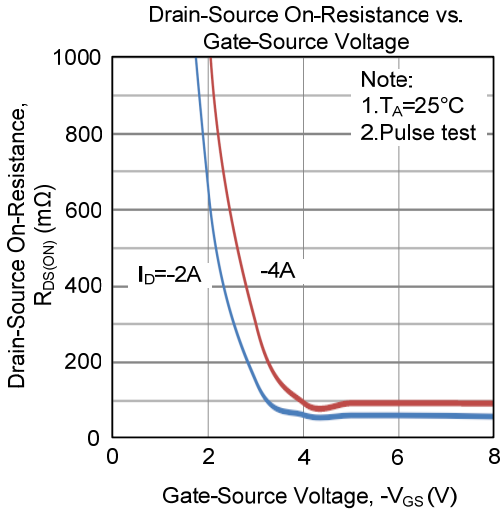

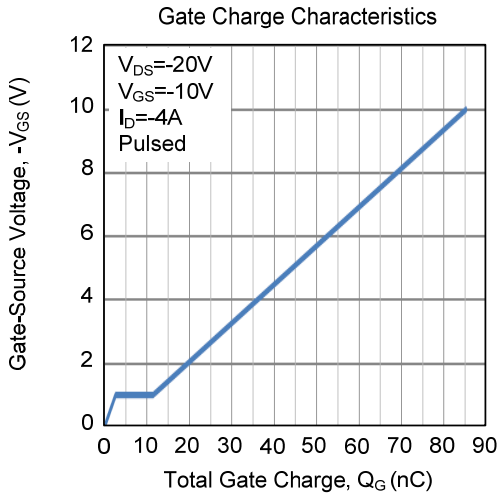

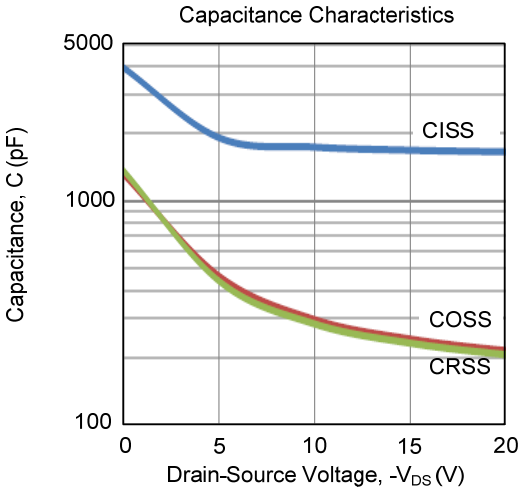

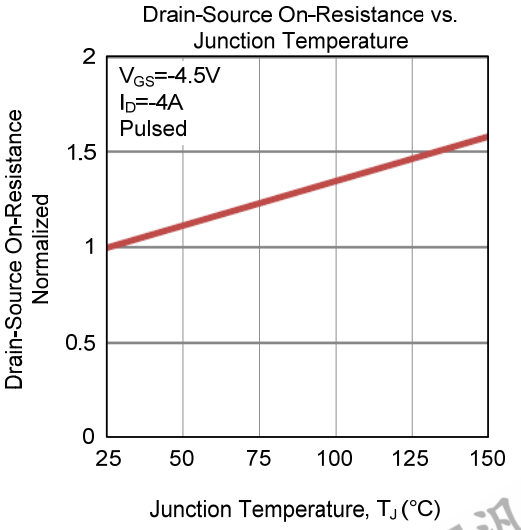

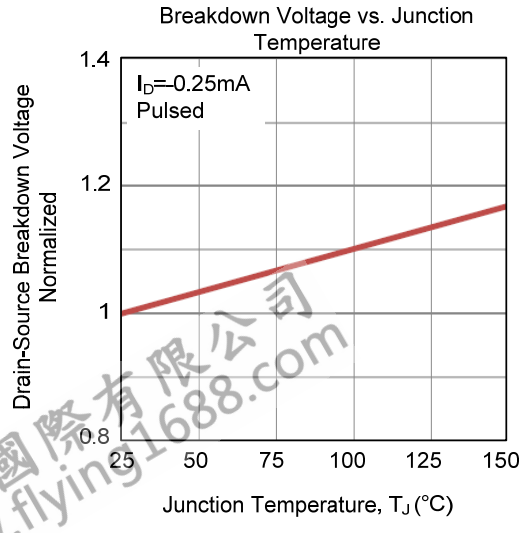

■ TYPICAL CHARACTERISTICS (Cont.)

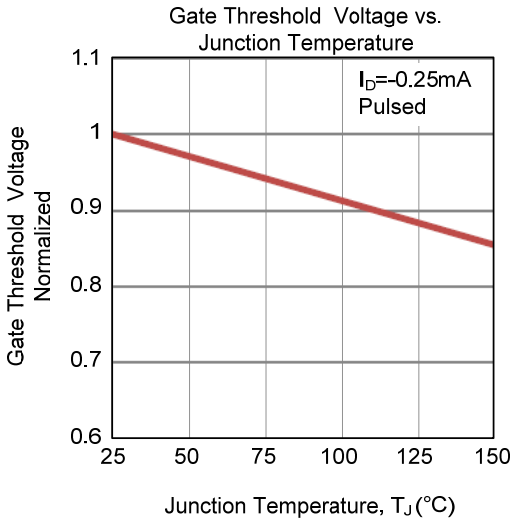

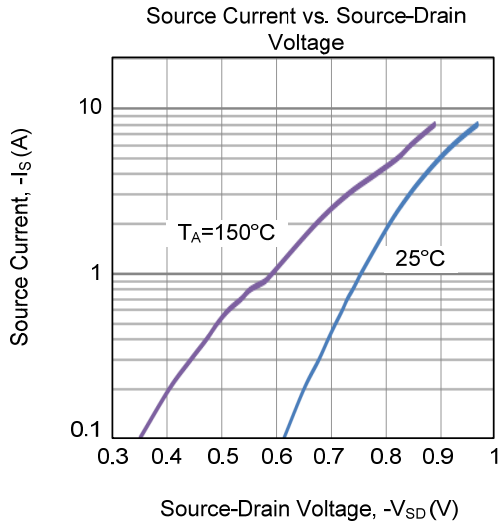

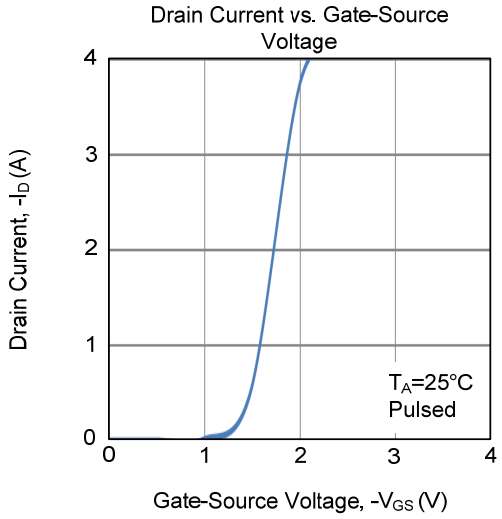

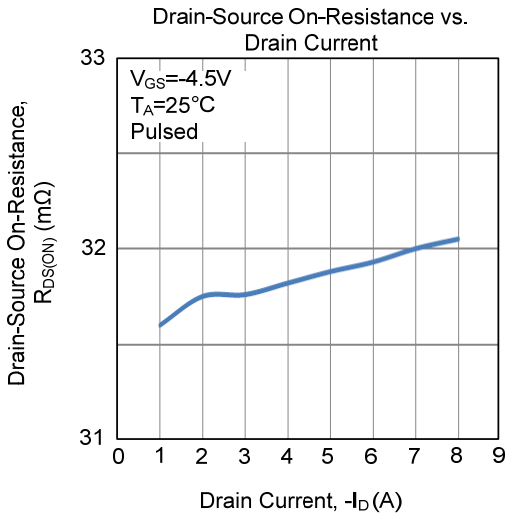

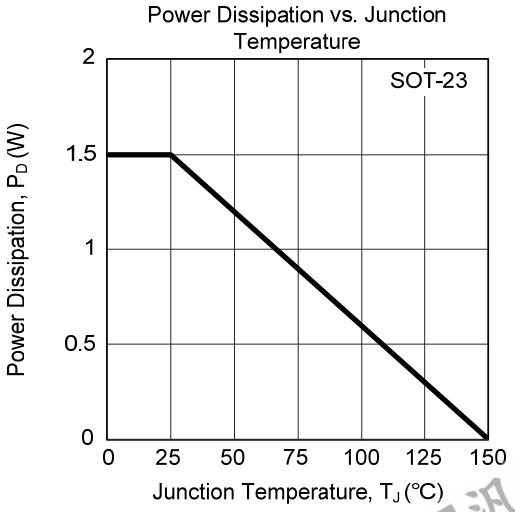

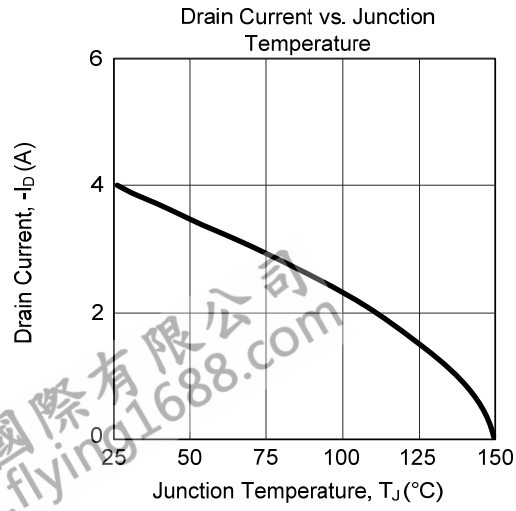

■ TYPICAL CHARACTERISTICS (Cont.)