50A, 40V N-CHANNEL POWER MOSFET

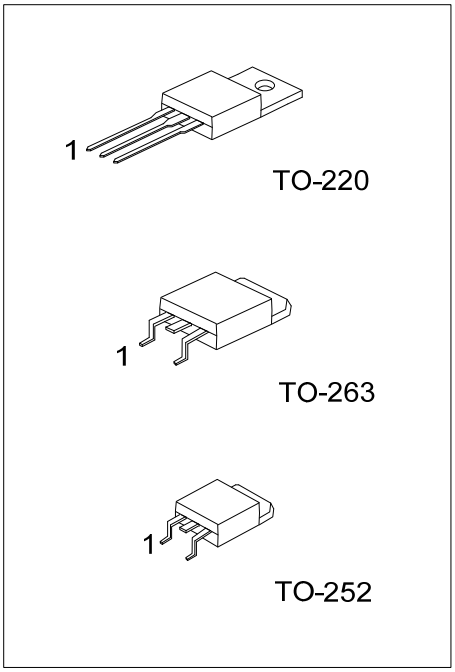

■ DESCRIPTION

The UTC **UT50N04** is a N-channel enhancement MOSFET using UTC's advanced technology to provide the customers with perfect $R_{DS(ON)}$ and high switching speed.

■ FEATURES

* $R_{DS(ON)} \leq 11m\Omega$ @ V_{GS}=4.5V, I_D=20A
  $R_{DS(ON)} \leq 7.0m\Omega$ @ V_{GS}=10V, I_D=25A
* High Switching Speed

■ SYMBOL

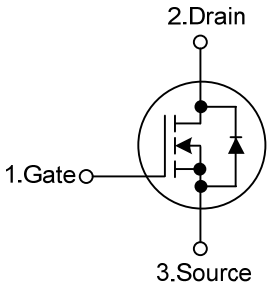

■ ORDERING INFORMATION

Ordering Number		Package	Pin Assignment			Packing
Lead Free	Halogen Free		1	2	3	
UT50N04L-TA3-T	UT50N04G-TA3-T	TO-220	G	D	S	Tube
UT50N04L-TN3-R	UT50N04G-TN3-R	TO-252	G	D	S	Tape Reel
UT50N04L-TQ2-T	UT50N04G-TQ2-T	TO-263	G	D	S	Tube
UT50N04L-TQ2-R	UT50N04G-TQ2-R	TO-263	G	D	S	Tape Reel

Note: Pin Assignment: G: Gate D: Drain S: Source

UT50N04G-TA3-T (1)Packing Type (2)Package Type (3)Green Package	(1) T: Tube, R: Tape Reel (2) TA3: TO-220, TN3: TO-252, TQ2: TO-263 (3) G: Halogen Free and Lead Free, L: Lead Free

■ MARKING

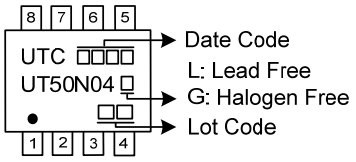

■ ABSOLUTE MAXIMUM RATINGS

PARAMETER		SYMBOL	RATINGS	UNIT
Drain-Source Voltage		V_{DSS}	40	V
Gate-Source Voltage		V_{GSS}	±20	V
Drain Current	Continuous (V_{GS}=10V)	I_D	50	A
	Pulsed (Note 2)	I_{DM}	200	A
Avalanche Energy	Single Pulsed (Note 3)	E_{AS}	142	mJ
Peak Diode Recovery dv/dt (Note 4)		dv/dt	7	V/ns
Power Dissipation	TO-220/TO-263	P_D	166	W
	TO-252		50	W
Junction Temperature		T_J	+150	°C
Storage Temperature		T_{STG}	-55 ~ +175	°C

Notes: 1. Absolute maximum ratings are those values beyond which the device could be permanently damaged. Absolute maximum ratings are stress ratings only and functional device operation is not implied.
2. Repetitive Rating: Pulse width limited by maximum junction temperature.
3. L=0.1mH, I_{AS}=53.2A, V_{DD}=25V, R_G=25Ω, Starting T_J=25°C
4. I_{SD} ≤ 30A, di/dt ≤ 200A/μs, V_{DD} ≤ BV_{DSS}, Starting T_J = 25°C

■ THERMAL DATA

PARAMETER		SYMBOL	RATINGS	UNIT
Junction to Ambient	TO-220/TO-263	θ_{JA}	62.5	°C/W
	TO-252		110	°C/W
Junction to Case	TO-220/TO-263	θ_{JC}	0.75	°C/W
	TO-252		2.5	°C/W

■ ELECTRICAL CHARACTERISTICS (T_J=25°C, unless otherwise specified)

PARAMETER		SYMBOL	TEST CONDITIONS	MIN	TYP	MAX	UNIT
OFF CHARACTERISTICS							
Drain-Source Breakdown Voltage		BV_{DSS}	V_{GS}=0V, I_D=250μA	40			V
Drain-Source Leakage Current		I_{DSS}	V_{DS}=40V, V_{GS}=0V			20	μA
Gate- Source Leakage Current	Forward	I_{GSS}	V_{GS}=+20V, V_{DS}=0V			+200	nA
	Reverse		V_{GS}=-20V, V_{DS}=0V			-200	nA
ON CHARACTERISTICS							
Gate Threshold Voltage		$V_{GS(TH)}$	V_{DS}=V_{GS}, I_D=250μA	0.8		2.3	V
Static Drain-Source On-State Resistance		$R_{DS(ON)}$	V_{GS}=4.5V, I_D=20A (Note 2)			11	mΩ
			V_{GS}=10V, I_D=25A			7.0	mΩ
DYNAMIC PARAMETERS							
Input Capacitance		C_{ISS}	V_{GS}=0V, V_{DS}=20V, f=1.0MHz		4500		pF
Output Capacitance		C_{OSS}			800		pF
Reverse Transfer Capacitance		C_{RSS}			350		pF
SWITCHING PARAMETERS							
Total Gate Charge		Q_G	V_{DS}=32V, V_{GS}=10V, I_D=50A I_G=1mA (Note 2)		82		nC
Gate to Source Charge		Q_{GS}			24		nC
Gate to Drain Charge		Q_{GD}			18		nC
Turn-ON Delay Time		$t_{D(ON)}$	V_{DD}=20V, I_D=50A, R_G=25Ω, V_{GS}=10V (Note 2)		40		ns
Rise Time		t_R			50		ns
Turn-OFF Delay Time		$t_{D(OFF)}$			204		ns
Fall-Time		t_F			120		ns
SOURCE- DRAIN DIODE RATINGS AND CHARACTERISTICS							
Maximum Continuous Drain-Source Diode Forward Current		I_S				50	A
Maximum Pulsed Drain-Source Diode Forward Current		I_{SM}				200	A
Drain-Source Diode Forward Voltage		V_{SD}	I_S=50A,V_{GS}=0V			1.3	V
Body Diode Reverse Recovery Time		t_{rr}	I_F=30A,V_{GS}=0V, di/dt=100A/μs		53		ns
Body Diode Reverse Recovery Charge		Q_{rr}			80		nC

Notes: 1. Pulse Test : Pulse width ≤ 300μs, Duty cycle ≤ 2%.
2. Essentially independent of operating ambient temperature.

■ TEST CIRCUITS AND WAVEFORMS

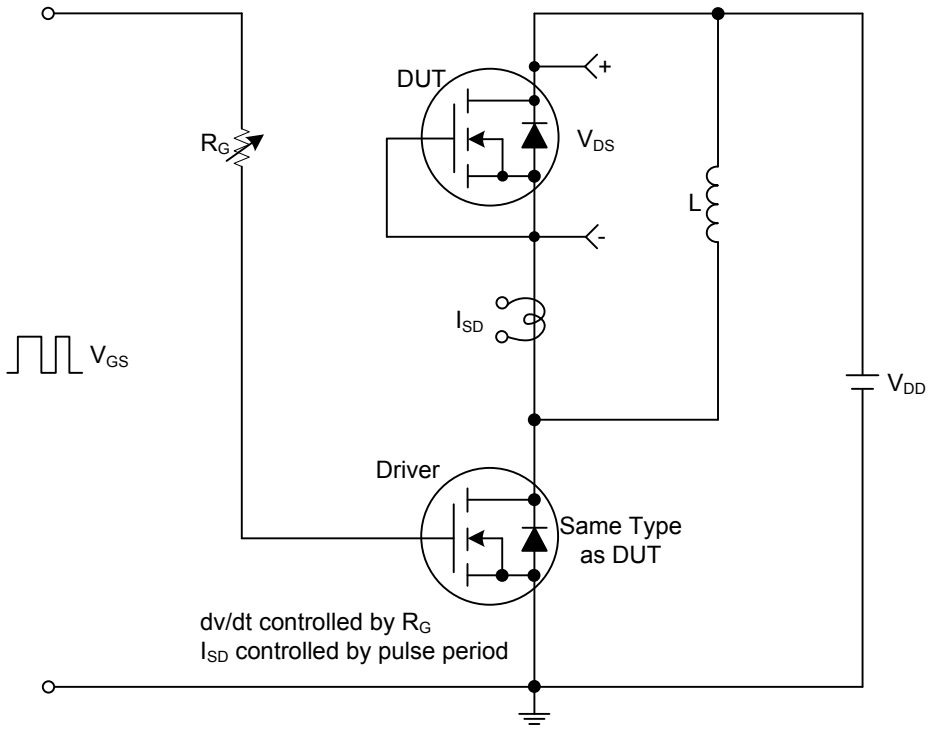

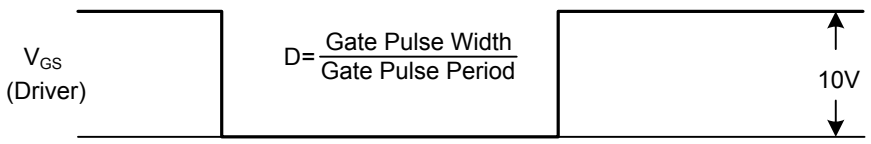

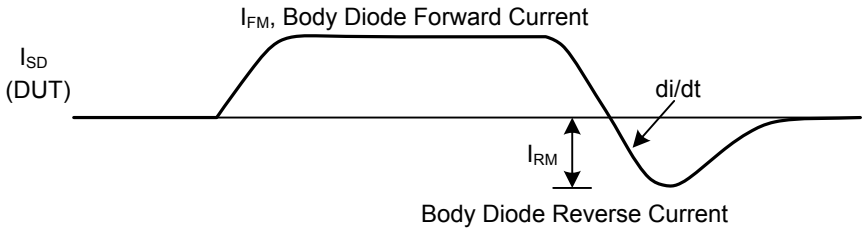

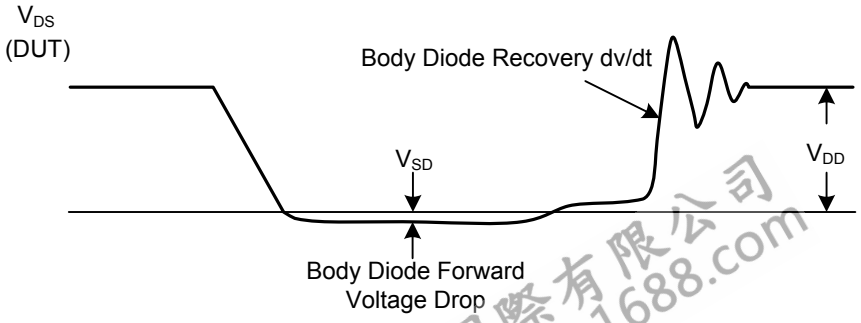

Peak Diode Recovery dv/dt Test Circuit and Waveforms

■ TEST CIRCUITS AND WAVEFORMS (Cont.)

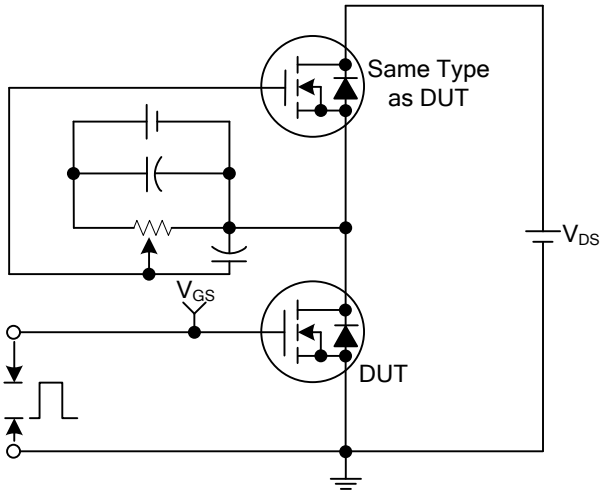

Gate Charge Test Circuit

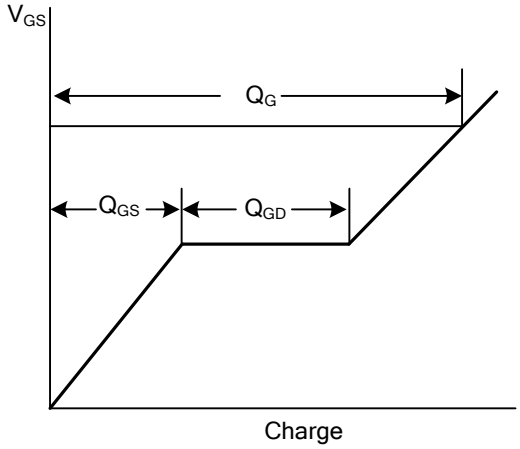

Gate Charge Waveforms

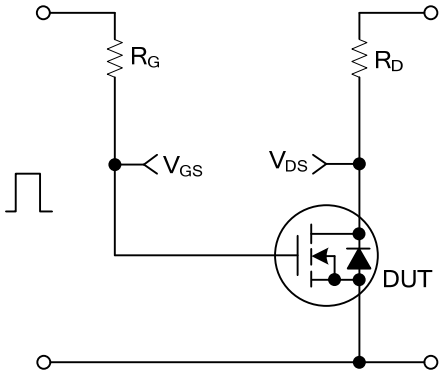

Resistive Switching Test Circuit

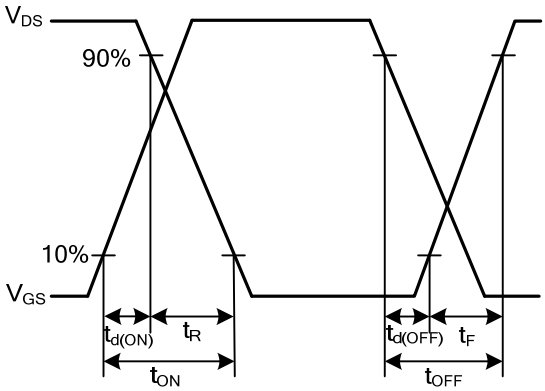

Resistive Switching Waveforms

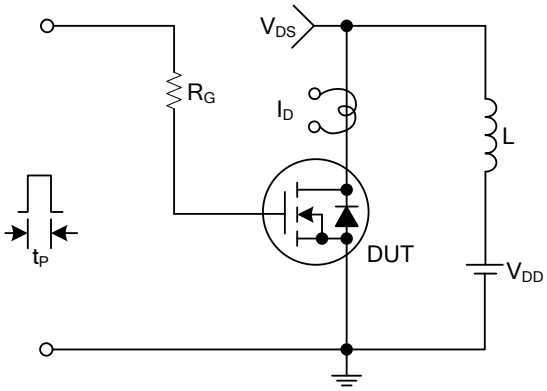

Unclamped Inductive Switching Test Circuit

$$E_{AS}=\frac{1}{2}LI_{AS}^2\frac{BV_{DSS}}{BV_{DSS}-V_{DD}}$$

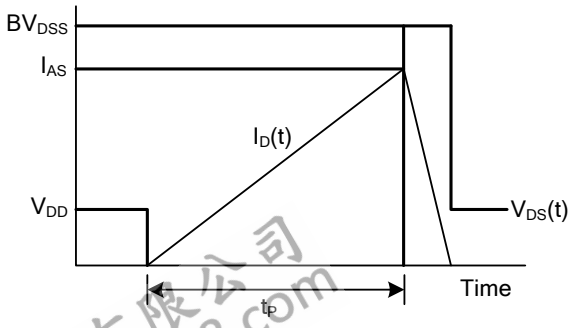

Unclamped Inductive Switching Waveforms

■ TYPICAL CHARACTERISTICS

Gate-Charge Characteristics

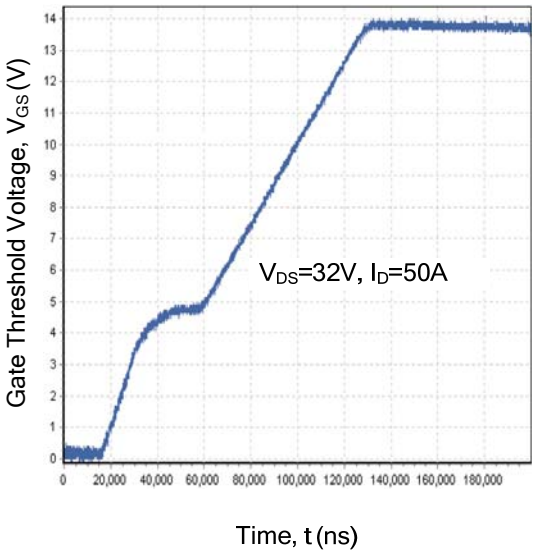

Capacitance Characteristics