DUAL POWER MOSFET (N-CHANNEL/P-CHANNEL)

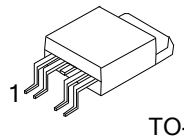

TO-252-4

■ DESCRIPTION

The UTC **UTT30NP30** is a dual power MOSFET. it uses UTC's advanced technology to provide customers with a minimum on-state resistance, low capacitance and low gate charge, etc.

The UTC **UTT30NP30** is suitable for CPU Power Delivery and DC−DC Converters, etc.

■ FEATURES

* N-Channel: 30A, 20V
  $R_{DS(on)}$<15mΩ @V_{GS}=10V, I_D=30A
  $R_{DS(on)}$<18mΩ @V_{GS}=4.5V, I_D=30A
  P-Channel: -30A, -25V
  $R_{DS(on)}$<25mΩ @V_{GS}= -10V, I_D= -30A
  $R_{DS(on)}$<24mΩ @V_{GS}= -4.5V, I_D= -30A
* Low capacitance

■ SYMBOL

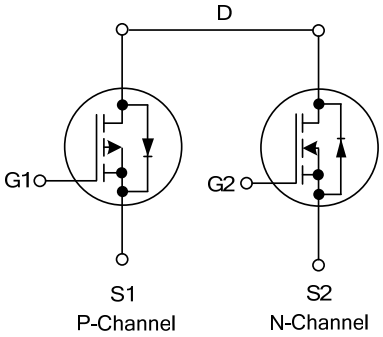

■ ORDERING INFORMATION

Ordering Number		Package	Pin Assignment					Packing
Lead Free	Halogen Free		1	2	3	4	5	
UTT30NP30L-TN4-R	UTT30NP30G-TN4-R	TO-252-4	S1	G1	D	S2	G2	Tape Reel

Note: Pin Assignment: G: Gate D: Drain S: Source

UTT30NP30L-TN4-T (1)Packing Type (2)Package Type (3)Green Package	(1) R: Tape Reel (2) TN4: TO-252-4 (3) L: Lead Free, G: Halogen Free and Lead Free

Copyright © 2014 Unisonic Technologies Co., Ltd

■ MARKING

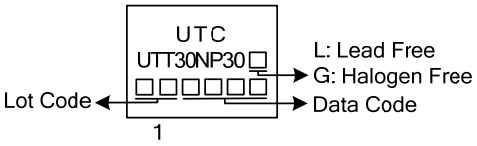

■ ABSOLUTE MAXIMUM RATINGS (T_J=25°C, unless otherwise specified)

PARAMETER			SYMBOL	RATINGS		UNIT
				N-CHANNEL	P-CHANNEL	
Drain-Source Voltage			V_{DSS}	20	-25	V
Gate-Source Voltage			V_{GSS}	±8	±20	V
Drain Current	Continuous	T_A=25°C	I_D	30	-30	A
	Pulsed (Note)		I_{DM}	120	-120	A
Power Dissipation			P_D	3.1		W
Junction Temperature			T_J	-55~+150		°C
Storage Temperature Range			T_{STG}	-55~+150		°C

Note: Absolute maximum ratings are those values beyond which the device could be permanently damaged. Absolute maximum ratings are stress ratings only and functional device operation is not implied.

■ THERMAL DATA

PARAMETER	SYMBOL	RATINGS	UNIT
Junction to Ambient	θ_{JA}	40	°C/W

■ ELECTRICAL CHARACTERISTICS(T_J=25°C unless otherwise noted)

N-channel

PARAMETER		SYMBOL	TEST CONDITIONS	MIN	TYP	MAX	UNIT
OFF CHARACTERISTICS							
Drain-Source Breakdown Voltage		BV_{DSS}	V_{GS}=0V, I_D=250μA	20			V
Drain-Source Leakage Current		I_{DSS}	V_{DS}=20V, V_{GS}=0V, T_J=25°C			1.0	μA
Gate-Source Leakage Current	Forward	I_{GSS}	V_{GS}=+8V, V_{GS}=0V			+100	nA
	Reverse		V_{GS}=-8V, V_{GS}=0V			-100	nA
ON CHARACTERISTICS							
Gate Threshold Voltage		$V_{GS(TH)}$	V_{DS}=V_{GS}, I_D=250μA	0.5		1.2	V
Static Drain-Source On-State Resistance (Note 2)		$R_{DS(ON)}$	V_{GS}=10V, I_D=30A			15	mΩ
			V_{GS}=4.5V, I_D=30A			18	mΩ
DYNAMIC PARAMETERS							
Input Capacitance		C_{ISS}	V_{GS}=0V, V_{DS}=20V, f=1.0MHz		1500		pF
Output Capacitance		C_{OSS}			260		pF
Reverse Transfer Capacitance		C_{RSS}			260		pF
SWITCHING PARAMETERS							
Total Gate Charge (Note 2)		Q_G	V_{GS}=10V, V_{DS}=16V, I_D=30A		160	170	nC
Gate to Source Charge		Q_{GS}			5.5		nC
Gate to Drain Charge		Q_{GD}			10.5		nC
Turn-ON Delay Time (Note 2)		$t_{D(ON)}$	V_{DS}=10V, I_D=1A V_{GS}=10V, R_G=3.3Ω		31	38	nS
Rise Time		t_R			57	62	nS
Turn-OFF Delay Time		$t_{D(OFF)}$			458	510	nS
Fall-Time		t_F			234	270	nS
SOURCE- DRAIN DIODE RATINGS AND CHARACTERISTICS							
Drain-Source Diode Forward Voltage(Note 2)		V_{SD}	I_{SD}=30A		0.9	1.25	V

■ ELECTRICAL CHARACTERISTICS(Cont.)

P-Channel

PARAMETER		SYMBOL	TEST CONDITIONS	MIN	TYP	MAX	UNIT
OFF CHARACTERISTICS							
Drain-Source Breakdown Voltage		BV_{DSS}	V_{GS}=0V, I_D=-250μA	-25			V
Drain-Source Leakage Current		I_{DSS}	V_{DS}=-24V, V_{GS}=0V, T_J=25°C			-1.0	μA
Gate-Source Leakage Current	Forward	I_{GSS}	V_{GS}=+25V, V_{GS}=0V			+100	nA
	Reverse		V_{GS}=-25V, V_{GS}=0V			-100	nA
ON CHARACTERISTICS							
Gate Threshold Voltage		$V_{GS(TH)}$	V_{DS}=V_{GS}, I_D=-250μA	-1	-1.5	-3	V
Static Drain-Source On-State Resistance (Note 2)		$R_{DS(ON)}$	V_{GS}=-10V, I_D=-30A			25	mΩ
			V_{GS}=-4.5V, I_D=-30A			34	mΩ
DYNAMIC PARAMETERS							
Input Capacitance		C_{ISS}	V_{GS}=0V, V_{DS}=-15V, f=1.0MHz		1500		pF
Output Capacitance		C_{OSS}			270		pF
Reverse Transfer Capacitance		C_{RSS}			230		pF
SWITCHING PARAMETERS							
Total Gate Charge (Note 2)		Q_G	V_{GS}=-10V, V_{DS}=-20V, I_D=-30A		140	160	nC
Gate to Source Charge		Q_{GS}			5.4		nC
Gate to Drain Charge		Q_{GD}			8.7		nC
Turn-ON Delay Time (Note 2)		$t_{D(ON)}$	V_{DS}= -12.5V, I_D= -1A V_{GS}= -10V, R_G=3.3Ω		34	42	nS
Rise Time		t_R			42	48	nS
Turn-OFF Delay Time		$t_{D(OFF)}$			308	330	nS
Fall-Time		t_F			173	220	nS
SOURCE- DRAIN DIODE RATINGS AND CHARACTERISTICS							
Drain-Source Diode Forward Voltage(Note 2)		V_{SD}	I_S= -30A			-1.2	V

Notes: 1. Pulse Test: Pulse width limited by Max. junction temperature.
2. N-CH, P-CH are same, mounted on 2oz FR4 board t≦10s.

UTC assumes no responsibility for equipment failures that result from using products at values that exceed, even momentarily, rated values (such as maximum ratings, operating condition ranges, or other parameters) listed in products specifications of any and all UTC products described or contained herein. UTC products are not designed for use in life support appliances, devices or systems where malfunction of these products can be reasonably expected to result in personal injury. Reproduction in whole or in part is prohibited without the prior written consent of the copyright owner. The information presented in this document does not form part of any quotation or contract, is believed to be accurate and reliable and may be changed without notice.