30A, 80V N-CHANNEL POWER MOSFET

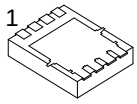

DFN5060-8

■ DESCRIPTION

The UTC **UTT80N03** is a N-channel Power MOSFET, it uses UTC's advanced technology to provide the customers with low $R_{DS(ON)}$ characteristic by high cell density trench technology.

The UTC **UTT80N03** is suitable for high efficiency synchronous rectification in SMPS, UPS, hard switched and high frequency circuits.

■ FEATURES

* $R_{DS(ON)}$ ≤ 5.0 mΩ @ V_{GS}=10V, I_D=40A
  $R_{DS(ON)}$ ≤ 8.7 mΩ @ V_{GS}=4.5V, I_D=20A
* Fast switching capability
* Avalanche energy tested
* Improved dv/dt capability, high ruggedness

■ SYMBOL

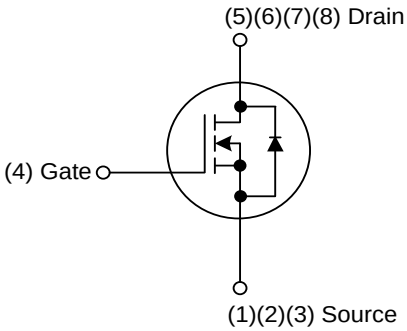

■ ORDERING INFORMATION

Ordering Number		Package	Pin Assignment								Packing
Lead Free	Halogen Free		1	2	3	4	5	6	7	8	
UTT80N03L-K08-5080-R	UTT80N03G-K08-5080-R	DFN5080-8	S	S	S	G	D	D	D	D	Tape Reel

Note: Pin Assignment: G: Gate D: Drain S: Source

UTT80N03G-K08-5080-R (1)Packing Type (2)Package Type (3)Green Package	(1) R: Tape Reel (2) K08-5060: DFN5060-8 (3) G: Halogen Free and Lead Free, L: Lead Free

■ MARKING

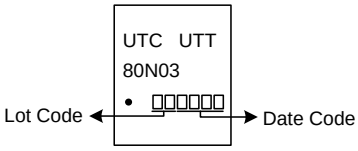

■ ABSOLUTE MAXIMUM RATINGS (T_C=25°C, unless otherwise specified)

PARAMETER	SYMBOL	RATINGS	UNIT
Drain-Source Voltage	V_{DSS}	30	V
Gate-Source Voltage	V_{GSS}	±20	V
Continuous Drain Current	I_D	80	A
Pulsed Drain Current (Note 2)	I_{DM}	160	A
Avalanche Energy	E_{AS}	205	mJ
Peak Diode Recovery dv/dt (Note 3)	dv/dt	4.8	V/ns
Power Dissipation	P_D	96	W
Junction Temperature	T_J	+150	°C
Storage Temperature Range	T_{STG}	-55 ~ +150	°C

Notes: 1. Absolute maximum ratings are those values beyond which the device could be permanently damaged. Absolute maximum ratings are stress ratings only and functional device operation is not implied.
2. Repetitive rating; pulse width limited by max. junction temperature.
3. L=0.1mH, I_{AS}=64A, V_{DD}=50V, R_G=25Ω, Starting T_J=25°C
4. I_{SD} ≤ 30A, di/dt ≤ 200A/μs, V_{DD}≤BV_{DSS}, starting T_J=25°C

■ THERMAL DATA

PARAMETER	SYMBOL	RATINGS	UNIT
Junction to Ambient	θ_{JA}	110	°C/W
Junction to Case	θ_{JC}	1.3	°C/W

■ ELECTRICAL CHARACTERISTICS (T_J=25°C, unless otherwise specified)

PARAMETER	SYMBOL	TEST CONDITIONS	MIN	TYP	MAX	UNIT
STATIC PARAMETERS						
Drain-Source Breakdown Voltage	BV_{DSS}	V_{GS}=0V, I_D=250μA	30			V
Zero Gate Voltage Drain Current	I_{DSS}	V_{DS}=30V, V_{GS}=0V			1	μA
		V_{DS}=30V, V_{GS}=0V, T_J=125°C			250	μA
Gate-Source Leakage Current	I_{GSS}	V_{GS}=±20V, V_{DS}=0V			±100	nA
ON CHARACTERISTICS						
Gate Threshold Voltage	$V_{GS(TH)}$	V_{DS}=V_{GS}, I_D=250μA	1.0		3.0	V
Static Drain-Source On-State Resistance	$R_{DS(ON)}$	V_{GS}=10V, I_D=40A			5.0	mΩ
		V_{GS}=4.5V, I_D=20A			8.7	mΩ
DYNAMIC PARAMETERS						
Input Capacitance	C_{ISS}	V_{GS}=0V, V_{DS}=25V, f=1.0MHz		4600		pF
Output Capacitance	C_{OSS}			570		pF
Reverse Transfer Capacitance	C_{RSS}			480		pF
SWITCHING PARAMETERS						
Total Gate Charge (Note 1)	Q_G	V_{DS}=15V, V_{GS}=10V, I_D=15A, I_G=1mA(Note 1, 2)		98		nC
Gate to Source Charge	Q_{GS}			10		nC
Gate to Drain Charge	Q_{GD}			16		nC
Turn-ON Delay Time (Note 1)	$t_{D(ON)}$	V_{DD} =15V, V_{GS}=10V, I_D =15A, R_G=3Ω(Note 1, 2)		30		ns
Turn-ON Rise Time	t_R			20		ns
Turn-OFF Delay Time	$t_{D(OFF)}$			85		ns
Turn-OFF Fall-Time	t_F			28		ns
SOURCE- DRAIN DIODE RATINGS AND CHARACTERISTICS						
Maximum Body-Diode Continuous Current	I_S				80	A
Pulsed Source Current	I_{SM}				160	A
Diode Forward Voltage (Note 1)	V_{SD}	I_S=80A,V_{GS}=0V			1.4	V
Body Diode Reverse Recovery Time	t_{rr}	I_F=30A, dI/dt=100A/μs (Note 1, 2)		84		ns
Body Diode Reverse Recovery Charge	Q_{rr}			80		nC

Notes: 1. Pulse test; pulse width ≤ 300μs, duty cycle ≤ 2%.
2. Essentially independent of operating temperature.

■ TEST CIRCUITS AND WAVEFORMS

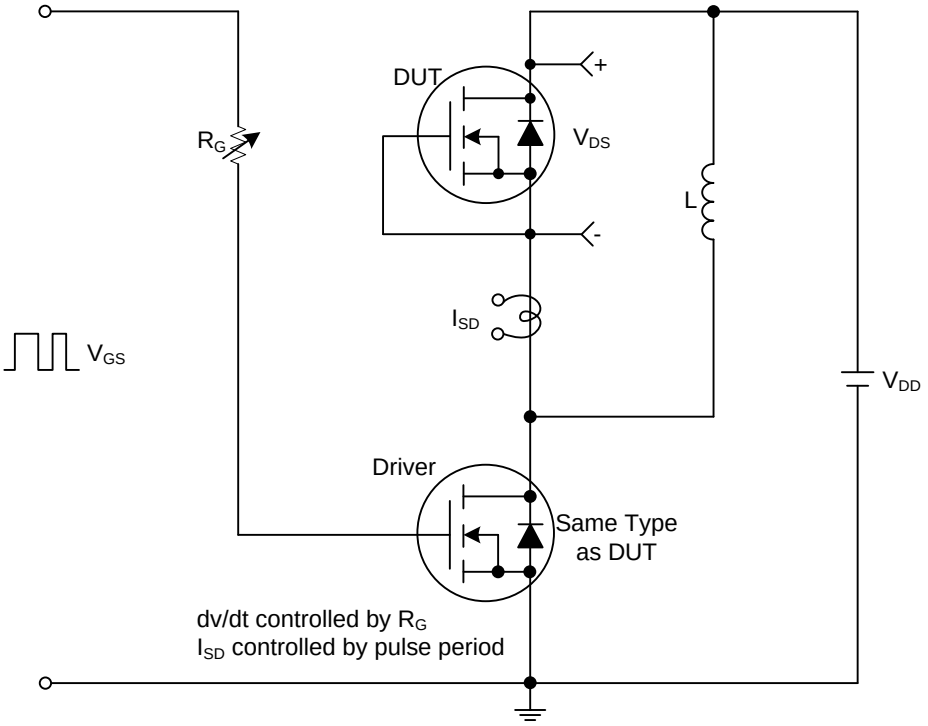

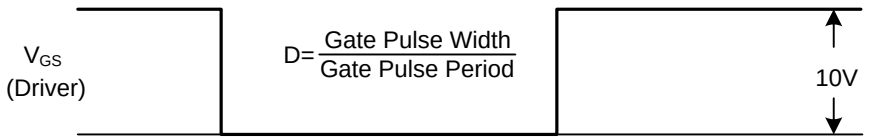

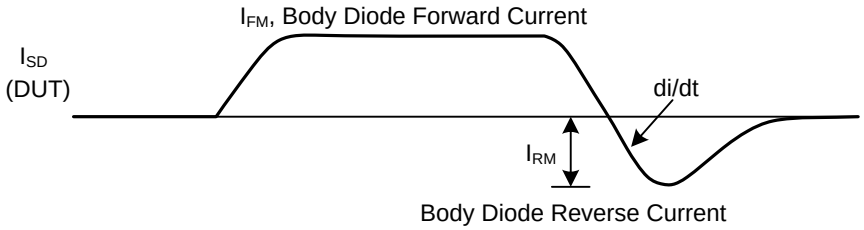

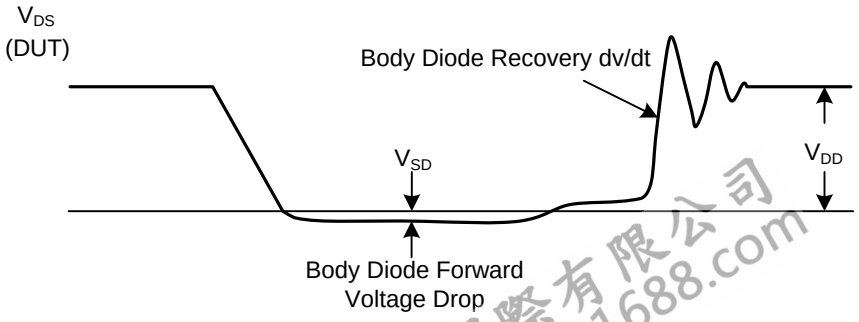

Peak Diode Recovery dv/dt Test Circuit and Waveforms

■ TEST CIRCUITS AND WAVEFORMS

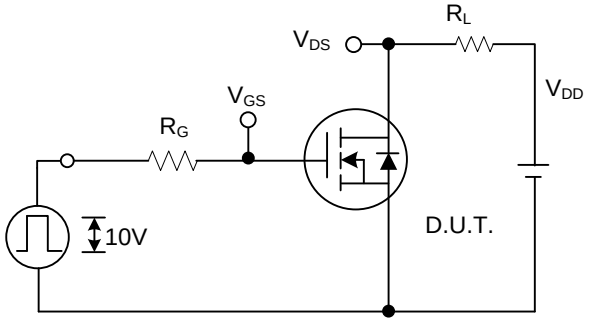

Switching Test Circuit

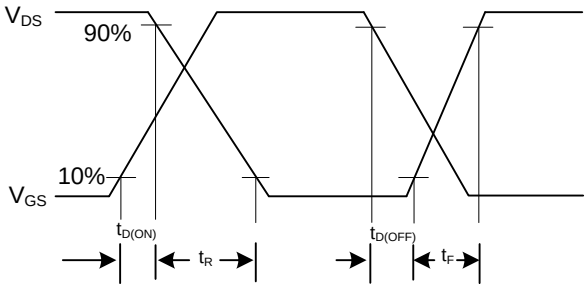

Switching Waveforms

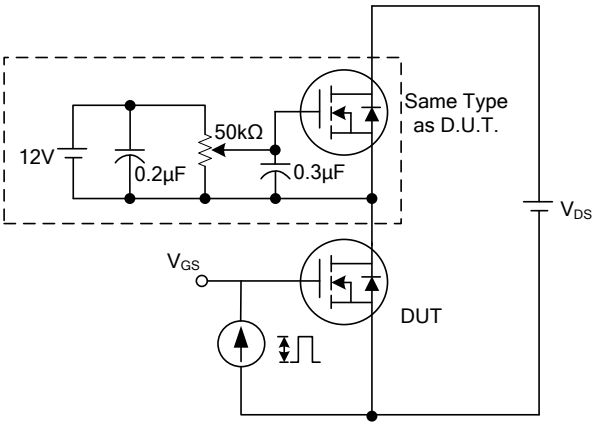

Gate Charge Test Circuit

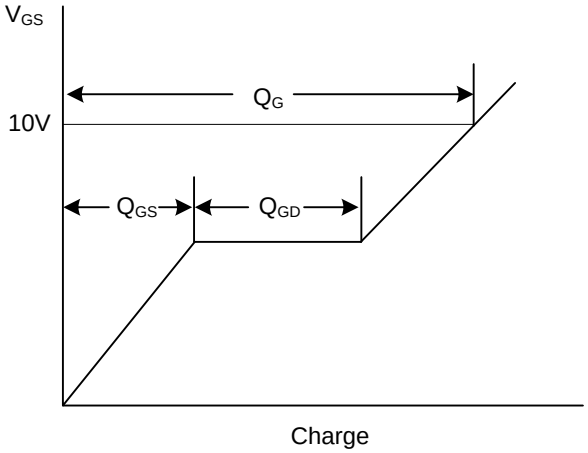

Gate Charge Waveform

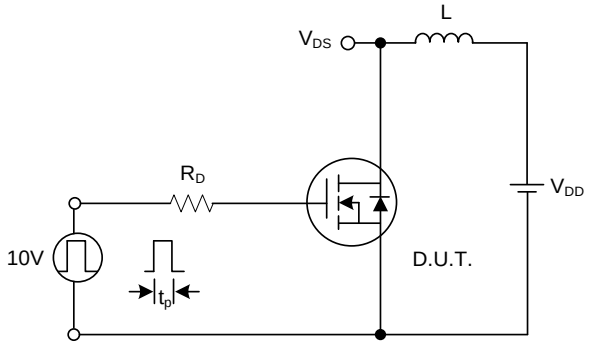

Unclamped Inductive Switching Test Circuit

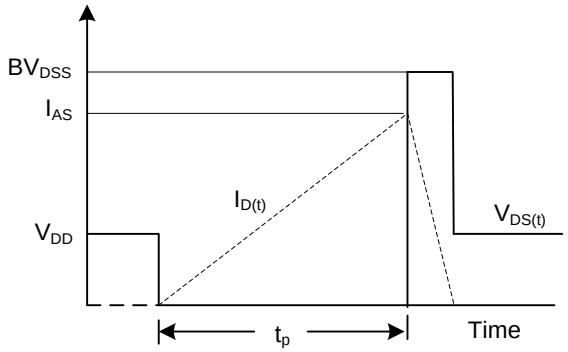

Unclamped Inductive Switching Waveforms