-8A, -30V P-CHANNEL POWER MOSFET

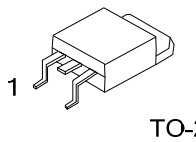

■ DESCRIPTION

The UTC **UTT8P03** is a P-channel MOSFET, it uses UTC's advanced technology to provide the customers with a minimum on state resistance, etc.

The UTC **UTT8P03** is suitable for battery switches, load switches and power management, etc.

■ FEATURES

* $R_{DS(ON)}$ < 33 mΩ @ V_{GS}=-10V, I_D=-8.0A
  $R_{DS(ON)}$ < 51 mΩ @ V_{GS}=-4.5V, I_D=-8.0A
* Low $R_{DS(ON)}$

■ SYMBOL

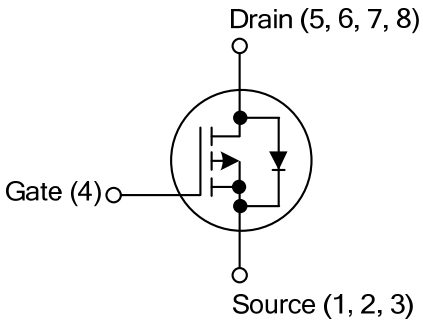

■ ORDERING INFORMATION

Ordering Number		Package	Pin Assignment			Packing
Lead Free	Halogen Free		1	2	3	
UTT8P03L-TN3-R	UTT8P03G-TN3-R	TO-252	G	D	S	Tape Reel

Note: Pin Assignment: G: Gate D: Drain S: Source

UTT8P03G-TN3-R (1)Packing Type (2)Package Type (3)Green Package	(1) R: Tape Reel (2) TN3: TO-252 (3) G: Halogen Free and Lead Free, L: Lead Free

■ MARKING

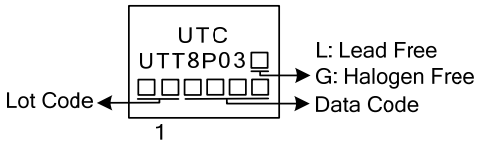

■ ABSOLUTE MAXIMUM RATINGS (T_C=25°C, unless otherwise specified)

PARAMETER	SYMBOL	RATINGS	UNIT
Drain-Source Voltage	V_{DSS}	-30	V
Gate-Source Voltage	V_{GSS}	±20	V
Continuous Drain Current	I_D	-8	A
Pulsed Drain Current (t=300μs)	I_{DM}	-32	A
Avalanche Energy, Single Pulsed (Note 3)	E_{AS}	22	mJ
Peak Diode Recovery dv/dt (Note4)	dv/dt	1.85	V/ns
Power Dissipation	P_D	41	W
Junction Temperature	T_J	+150	°C
Storage Temperature Range	T_{STG}	-50 ~+150	°C

Notes: 1. Absolute maximum ratings are those values beyond which the device could be permanently damaged. Absolute maximum ratings are stress ratings only and functional device operation is not implied.
2. Repetitive Rating: Pulse width limited by maximum junction temperature.
3. L=-0.1mH, I_{AS}=-21A, V_{DD}=-25V, R_G=25Ω, Starting T_J=25°C
4. I_{SD} ≤ -8A, di/dt ≤200A/μs, V_{DD} ≤ BV_{DSS}, Starting T_J=25°C

■ THERMAL DATA

PARAMETER	SYMBOL	RATINGS	UNIT
Junction to Ambient	θ_{JA}	60	°C/W
Junction to Case	θ_{JC}	3.04	°C/W

Note: The data tested by surface mounted on a 1 inch^2 FR-4 board with 2OZ copper.

■ ELECTRICAL CHARACTERISTICS (T_J=25°C, unless otherwise specified)

PARAMETER		SYMBOL	TEST CONDITIONS	MIN	TYP	MAX	UNIT
STATIC PARAMETERS							
Drain-Source Breakdown Voltage		BV_{DSS}	I_D=-250μA, V_{GS}=0V	-30			V
Zero Gate Voltage Drain Current		I_{DSS}	V_{DS}=-30V, V_{GS}=0V			-1	μA
Gate-Source Leakage Current	Forward	I_{GSS}	V_{GS}=+20V, V_{DS}=0V			+100	nA
	Reverse		V_{GS}=-20V, V_{DS}=0V			-100	nA
ON CHARACTERISTICS							
Gate Threshold Voltage		$V_{GS(TH)}$	V_{DS}=V_{GS}, I_D=-250μA	-1.0		-3.0	V
Static Drain-Source On-State Resistance (Note 1)		$R_{DS(ON)}$	V_{GS}=-10V, I_D=-8.0A			33	mΩ
			V_{GS}=-4.5V, I_D=-8.0A			51	mΩ
DYNAMIC PARAMETERS							
Input Capacitance		C_{ISS}	V_{GS}=0V, V_{DS}=-10V, f=1.0MHz		1200		pF
Output Capacitance		C_{OSS}			185		pF
Reverse Transfer Capacitance		C_{RSS}			115		pF
SWITCHING PARAMETERS							
Total Gate Charge (Note 1)		Q_G	V_{GS}=-4.5V, V_{DD}=-24V, I_D=-8A I_G=1mA (Note 1, 2)		12.5		nC
Gate to Source Charge		Q_{GS}			3.8		nC
Gate to Drain Charge		Q_{GD}			5.7		nC
Turn-ON Delay Time (Note 1)		$t_{D(ON)}$	V_{GS}=-4.5V, V_{DD}=-15V, I_D=-8A R_G=25Ω (Note 1, 2)		8		ns
Rise Time		t_R			17		ns
Turn-OFF Delay Time		$t_{D(OFF)}$			70		ns
Fall-Time		t_F			41		ns
SOURCE- DRAIN DIODE RATINGS AND CHARACTERISTICS							
Continuous Source-Drain Diode Current		I_S				-8	A
Pulse Diode Forward Current		I_{SM}				-32	A
Body Diode Voltage (Note 1)		V_{SD}	I_S=-8A,V_{GS}=0V			-1.5	V
Reverse Recovery Time (Note 1)		t_{rr}	V_{GS}=0V, I_S=-8A, dI_F/dt=-100A/μs		170		nC
Reverse Recovery Charge		Q_{rr}			250		nS

Notes: 1. Pulse test; pulse width ≤ 300μs, duty cycle ≤ 2%.
2. Essentially independent of operating temperature.

■ TEST CIRCUITS AND WAVEFORMS

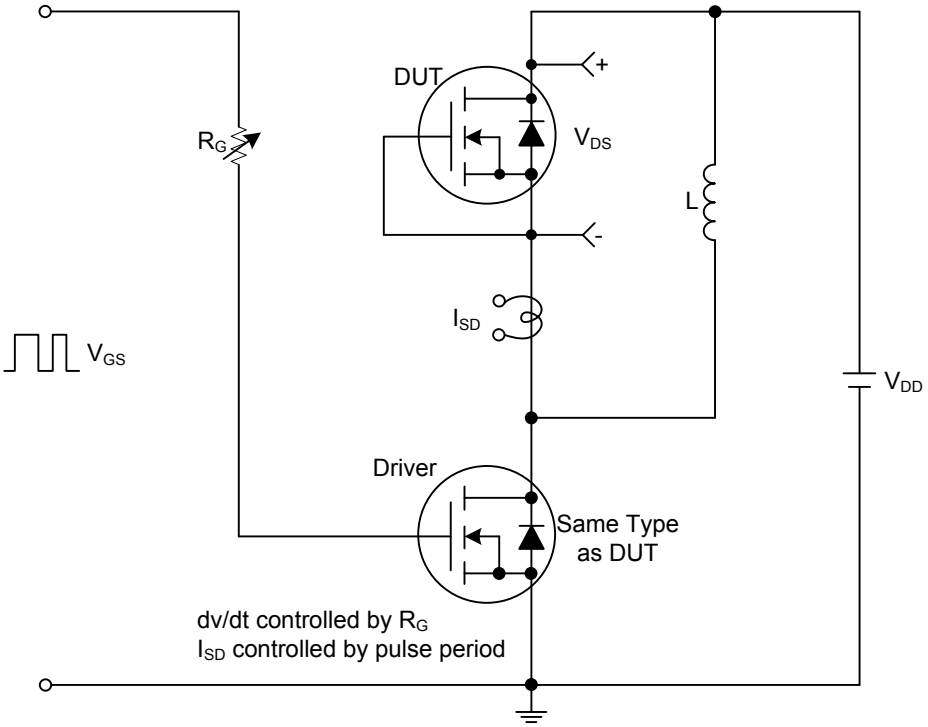

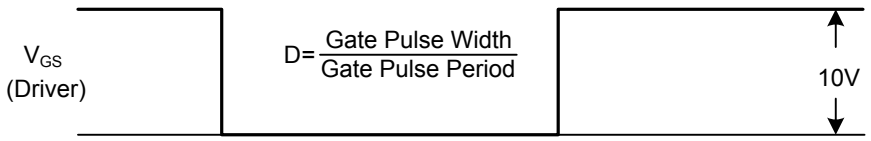

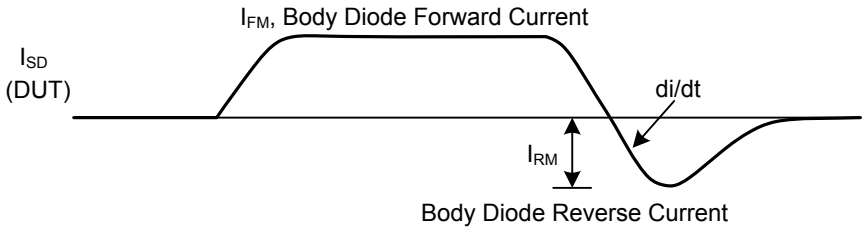

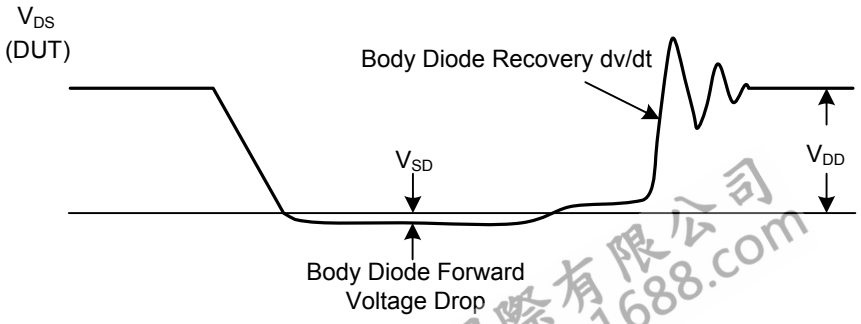

Peak Diode Recovery dv/dt Test Circuit and Waveforms

■ TEST CIRCUITS AND WAVEFORMS

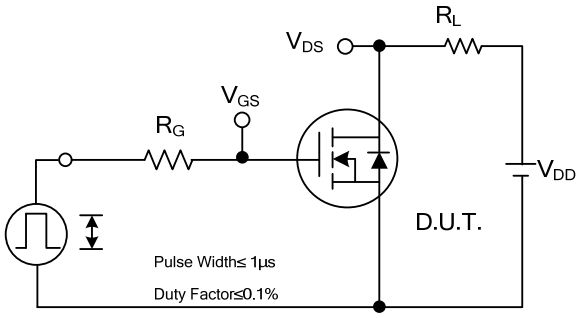

Switching Test Circuit

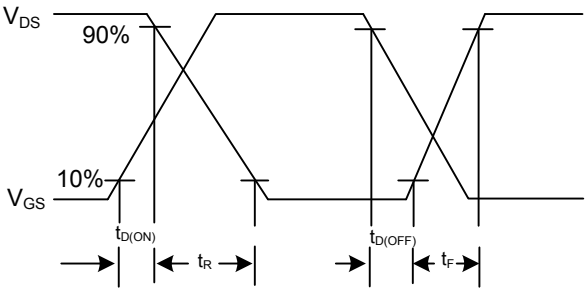

Switching Waveforms

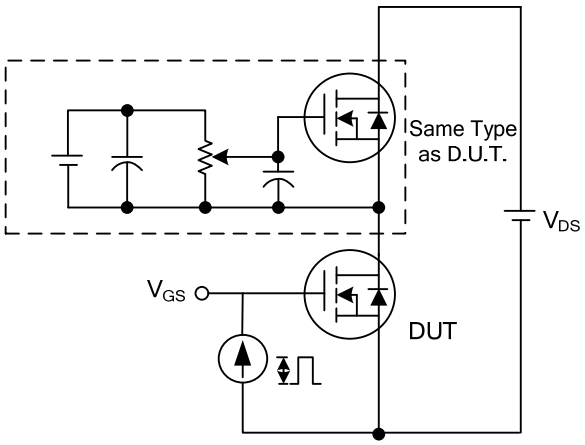

Gate Charge Test Circuit

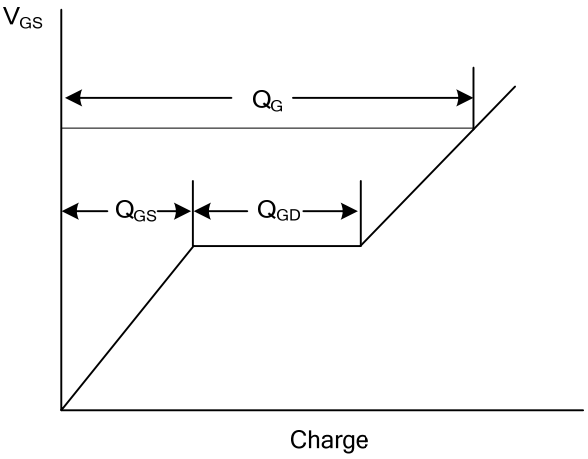

Gate Charge Waveform

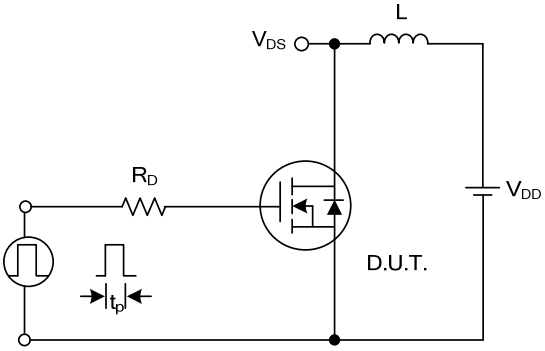

Unclamped Inductive Switching Test Circuit

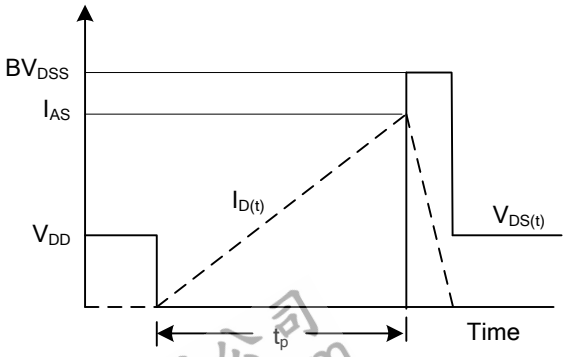

Unclamped Inductive Switching Waveforms

■ TYPICAL CHARACTERISTICS